tehnoteka

https://cenoteka.rs

Uputstvo za upotrebu (EN)

LIEBHERR ugradna vinska vitrina WKEes 553

LIEBHERR



Cenoteka je online destinacija za upoređivanje cena i karakteristika bele tehnike, potrošačke elektronike i IT uređaja kod trgovinskih lanaca i internet prodavnica u Srbiji. Naša stranica vam omogućava da istražite najnovije informacije, detaljne karakteristike i konkurentne cene proizvoda.

Posetite nas i uživajte u ekskluzivnom iskustvu pametne kupovine klikom na link:

https://cenoteka.rs/p/liebherr-ugradna-vinska-vitrina-wkees-553/

Operating instructions
Wine storage cabinet

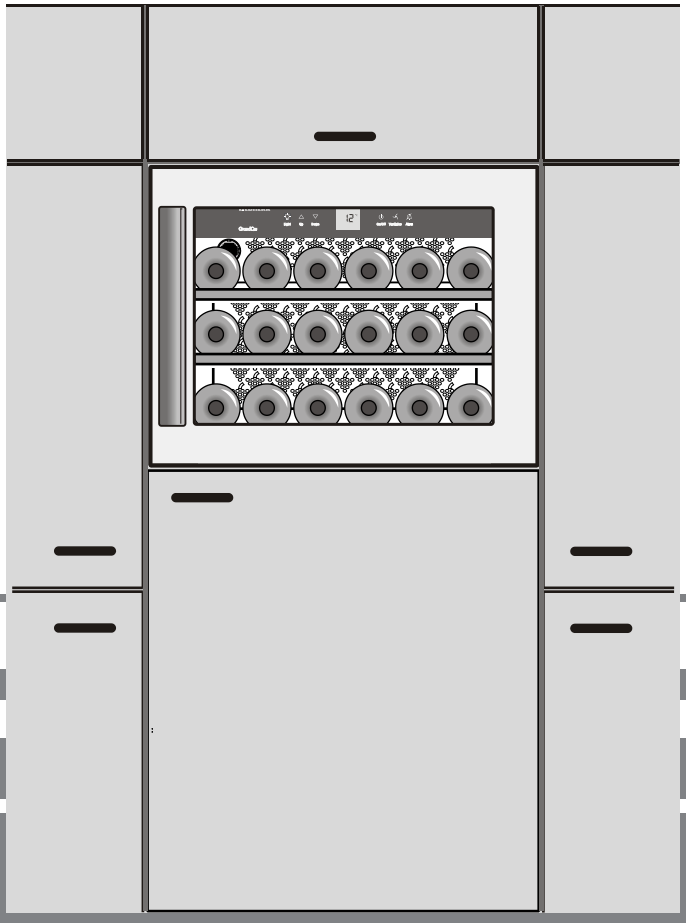

7081 179-01

WKEes

LIEBHERR

Disposal notes

The appliance contains reusable materials and should be disposed of properly - not simply with unsorted household refuse. Appliances which are no longer needed must be disposed of in a professional and appropriate way, in accordance with the current local regulations and laws.

When disposing of the appliance, ensure that the refrigerant circuit is not damaged to prevent uncontrolled escape of the refrigerant it contains (data on type plate) and oil.

- Disable the appliance.
- Pull out the mains plug.
- Cut through the connection cable.

⚠ WARNING

Danger of suffocation due to packing material and plastic film!

Do not allow children to play with packaging material.

Take the packaging material to an official collection point.

Range of appliance use

The appliance is suitable solely for storing wine in a domestic environment or similar. This includes, for example, use

- in staff kitchenettes, bed and breakfast establishments,
- by guests in cottages, hotels, motels and other forms of accommodation,
- in catering and similar services in the wholesale trade.

Use the appliance solely as is customary within a domestic environment. All other types of use are inadmissible. The appliance is not suitable for storing and cooling medicines, blood plasma, laboratory preparations or similar substances and products covered by the 2007/47/EC Medical Devices Directive. Any misuse of the appliance may result in damage to or spoilage of stored goods. Furthermore, the appliance is not suitable for operation in potentially explosive atmospheres.

Description of the appliance

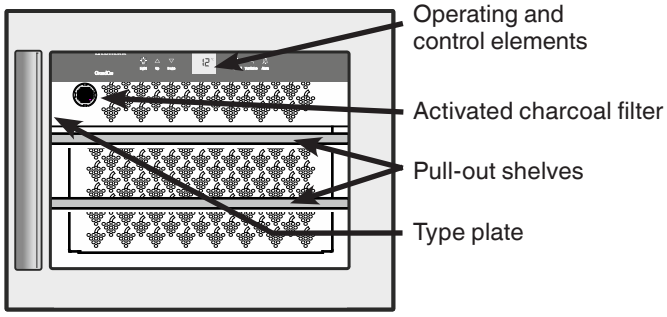

Safety instructions and warnings

- To prevent injury or damage to the unit, the appliance should be unpacked and set up by two people.
- In the event that the appliance is damaged on delivery, contact the supplier immediately before connecting to the mains.
- To guarantee safe operation, ensure that the appliance is set up and connected as described in these operating instructions.
- Disconnect the appliance from the mains if any fault occurs. Pull out the plug, switch off or remove the fuse.
- When disconnecting the appliance, pull on the plug, not on the cable.
- Any repairs and work on the appliance should only be carried out by the customer service department, as unauthorised work could prove highly dangerous for the user. The same applies to changing the mains power cable.
- Do not allow naked flames or ignition sources to enter the appliance. When transporting and cleaning the appliance, ensure that the refrigerant circuit is not damaged. In the event of damage, make sure that there are no ignition sources nearby and keep the room well ventilated.
- Do not stand on the plinth, drawers or doors or use them to support anything else.
- This appliance can be used by children of 8 years old and over, and also by persons with restricted physical, sensory or mental capacity or lack of experience and knowledge, if they are supervised or have been instructed on safe use of the appliance and understand the resulting risks. Children must not be allowed to play with the appliance. Cleaning and user maintenance must not be carried out by children without supervision.
- Avoid prolonged skin contact with cold surfaces or chilled/frozen food. This could cause pain, numbness and frostbite. In the case of prolonged skin contact, protective measures should be taken, e.g. gloves should be worn.
- Do not consume food which has been stored for too long, as it could cause food poisoning.
- Do not store explosives or sprays using combustible propellants such as butane, propane, pentane, etc. in the appliance. Electrical components might cause leaking gas to ignite. You may identify such sprays by the printed contents or a flame symbol.

- Do not use electrical appliances inside the appliance.
- The appliance is designed for use in enclosed areas. Do not operate the appliance outdoors or in areas where it is exposed to splash water or damp conditions.
- The LED light strip illuminates the interior of the appliance. It is not suitable for lighting a room.
- When transporting or operating the appliance at an altitude of more than 1500 m above sea level, the glass pane in the door can break due to the reduction in air pressure. Broken fragments are sharp-edged and can cause serious injury.

Climate rating

The climate rating indicates the room temperature at which the appliance may be operated in order to achieve full refrigeration performance.

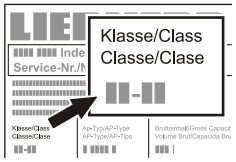

The climate rating is indicated on the type plate.

The position of the type plate is shown in the section entitled **Description of the appliance**.

Climate rating	Room temperature
SN	+10°C to +32°C
N	+16°C to +32°C
ST	+16°C to +38°C
T	+16°C to +43°C
SN-ST	+10°C to +38°C
SN-T	+10°C to +43°C

Do not operate the appliance outside the specified room temperature range.

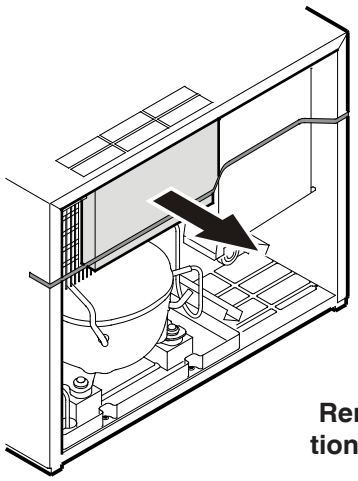

IMPORTANT!

Remove all transportation safety components.

Setting up

- Standard EN 378 specifies that the room in which you install your appliance must have a volume of 1 m^3 per 8 g of R 600a refrigerant used in the appliance, so as to avoid the formation of inflammable gas/air mixtures in the room where the appliance is located in the event of a leak in the refrigerant circuit. The quantity of refrigerant used in your appliance is indicated on the type plate on the inside of the appliance.
- Only use the appliance when it is installed.
- Do not cover ventilation openings or grille.

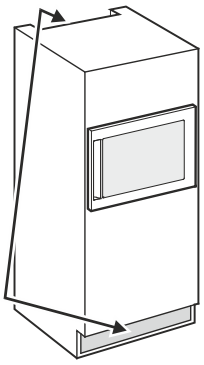

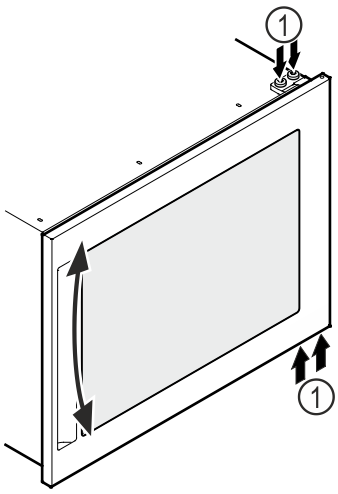

Important

If the door is at an angle, adjust the angle.

- Undo the screws (1) .
- Align the door.
- Tighten screws (1) .

Electrical connection

Only operate the appliance with **alternating current (AC)**.

The permissible voltage and frequency are indicated on the type plate. The position of the type plate is shown in the section entitled **Description of the appliance**.

The socket must be properly earthed and protected by a fuse.

The tripping current of the fuse must be between 10 A and 16 A.

The socket must not be situated behind the appliance and must be easily accessible.

Do not connect the appliance using an extension cable or extension socket.

Do not use stand-alone inverters (conversion of direct current to alternating/three-phase current) or energy-saving plugs. Risk of damage to the electronic control system!

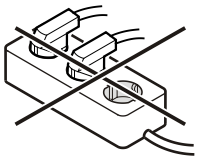

EPREL database

As from 1 March 2021, information about energy labelling and ecodesign requirements will be available in the European product database (EPREL). You can access the product database using the following link: https://eprel.ec.europa.eu/. You will be asked to enter the model identifier. You will find the model identifier on the type plate.

Installation dimensions (mm)

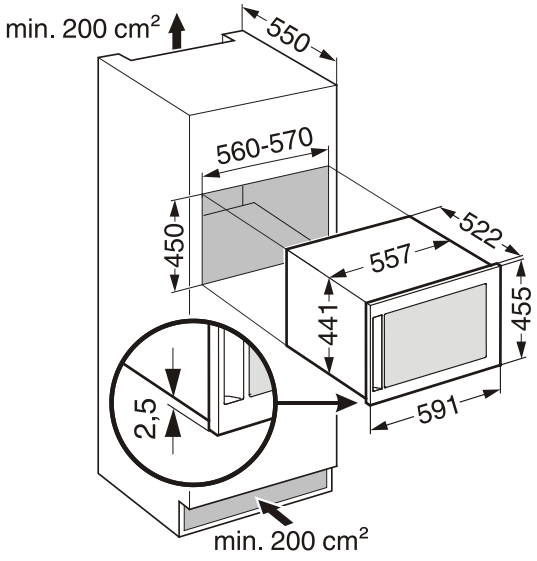

Changing over door hinges

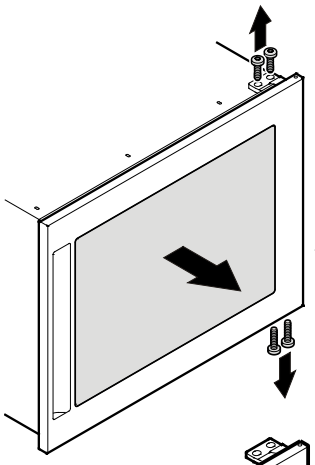

1. Remove the door.

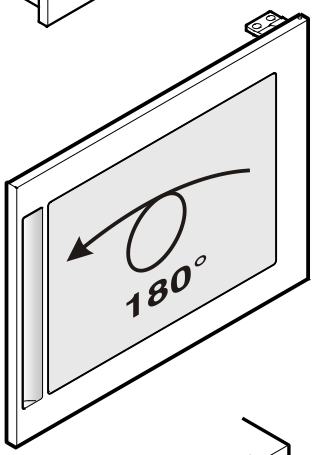

2. Rotate door by 180°.

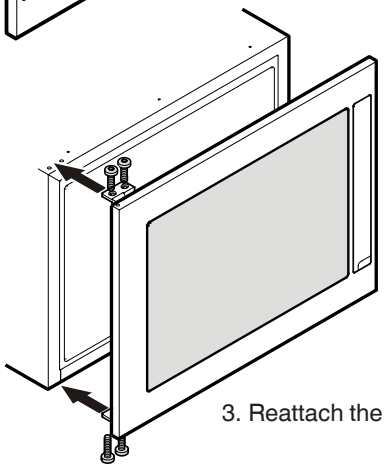

3. Reattach the door.

Installing the appliance

1. Secure the stop bracket in the recess with screws.
2. Connect the appliance to the mains.

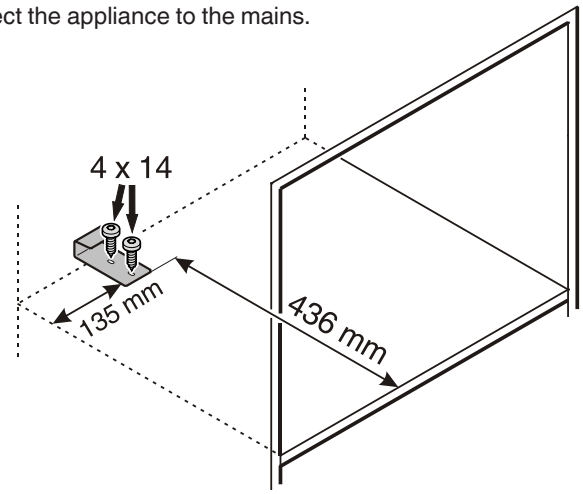

3. Before installing in a kitchen unit, screw the attachment plate provided onto the appliance with screws M4 x 8).

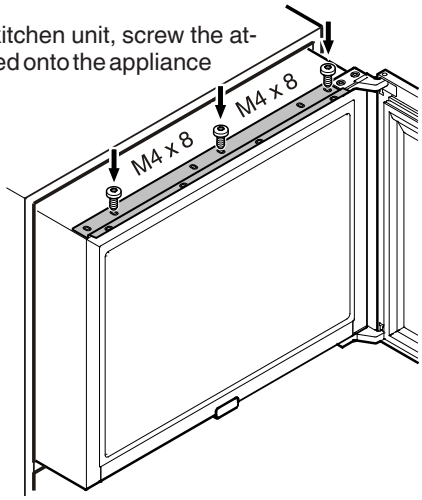

4. Slide the appliance into the recess leaving a 21 mm gap between the body of the unit and the front face of the door.

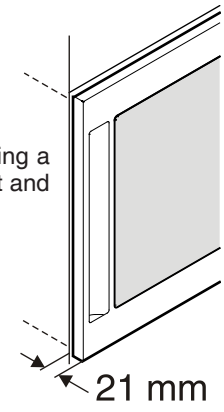

5. Then secure the appliance with 3.5 x 17 chipboard screws through the top bracket.

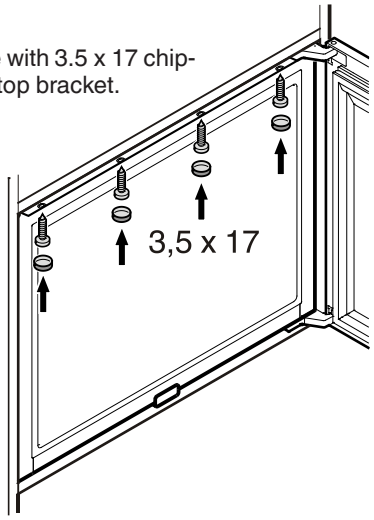

Operating and control elements

The electronic control panel has the new "**touch capacitance technology**". Any function can be activated by touching the corresponding icon.

The exact contact point is between the symbol and its label



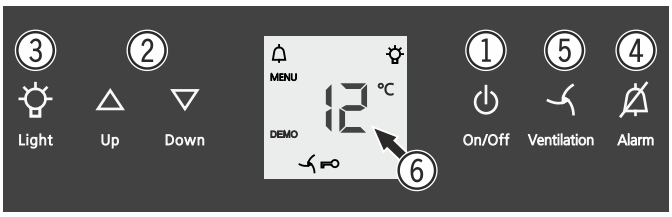

(1) On/Off button
(2) Temperature setting buttons
(3) Interior light On/Off button
(4) Audible warning On/Off button
(5) Fan button
(6) Temperature display

Symbols in the display

Alarm (symbol flashes if the temperature inside the appliance is too high or too low)

DEMO Demo mode is activated

MENU Setup mode is activated (activating the child lock and adjusting the display brightness

The interior fan runs constantly

Child lock is activated

The interior light is switched on constantly

Switching the appliance on and off

Switching the appliance on

Press the **On/Off** button until the temperature display lights up.

On/Off

Switching the appliance off

Keep the **On/Off** button pressed for approx. 3 seconds so that the temperature display goes out.

Setting the temperature

Reducing the temperature

Press the **Down** button.

Up Down

Increasing the temperature

Press the **Up** button.

- When pressing one of the buttons for the first time, the display will start to flash.
- Pressing this button again enables you to change the temperature setting.
- The electronic control system will switch over automatically about 5 seconds after the last time you pressed the button, and the actual temperature will be displayed.

The temperature can be set at between +5°C and +20°C.

Storing wine

If you are storing wine for long periods of time, it should be stored at a temperature of between 10°C and 14°C. The following drinking temperatures are recommended for the various types of wine.

Red wines: **+14°C to +18°C**
Rosé wines: **+10°C to +12°C**
White wines: **+8°C to +12°C**
Sparkling wines, Prosecco: **+7°C to +9°C**
Champagne: **+5°C to +7°C**

Fan

The interior fan ensures a constant and even interior temperature and a suitable climate for wine storage.

When activating the **Ventilation** button, the humidity in the appliance is further increased, which has a particularly positive effect for long-term storage. The increased level of humidity prevents the corks from drying out.

Ventilation

Note
If the appliance is operated in a low ambient temperature, the fan may also run when the fan function is deactivated.

Door open alarm

If the door is left open for more than 60 seconds, the audible warning signal will sound.

Alarm

If the door must be opened for a lengthy period to place items into the appliance, cancel the audible warning signal by pressing the **Alarm** button. The alarm switches back to standby when the door is shut.

Temperature alarm

If the temperatures in the interior are out of the permitted range, the audible warning signal will sound and the temperature display will flash.

- Cancel the audible warning signal by pressing the **Alarm** button.

The temperature display will stop flashing as soon as the temperature in the interior has reached the set value.

Temperature alarm after a fault in the appliance

If the appliance develops a fault, the temperature in the interior may rise too high or fall too low. The audible warning signal will sound and the temperature display will flash.

- Cancel the audible warning signal by pressing the **Alarm** button.

If the temperature displayed is too high (warm), first check whether the door is closed correctly.

If the temperature display continues to show a value that is too high or too low after one hour, contact the customer service department.

If **F1** appears in the display, the appliance has suffered a fault. In this case, contact the customer service department.

Setup mode

In setup mode you can set the child lock and adjust the brightness of the display. The child lock is designed to protect the appliance from being switched off accidentally.

Activating the child lock

Press Ventilation for 5 seconds. Display = c

Ventilation Display = c 1

Ventilation Display = c

On/Off Display = 8 °C

Deactivating the child lock

Ventilation for 5 seconds. Display = c

Ventilation Display = c0

Ventilation Display = c

On/Off Display = 8 °C

Adjusting the display brightness

Ventilation for 5 seconds. Display = c

Up Display = h

Ventilation Display = h5

Use buttons **Up** and **Down** to select the desired setting.

h0 = display lighting off
h1 = minimum brightness
h5 = maximum brightness

Ventilation Display = h

On/Off Display = 8 °C

The adjusted brightness will be activated after one minute.

Note
If a button is pressed, the display lights up for one minute at maximum brightness.

When commissioning the appliance, the adjusted brightness will only be active once the set interior temperature of the appliance has been reached.

Equipment

Pull-out grid shelves

The pull-out grid shelf allows bottles of wine to be removed more easily.

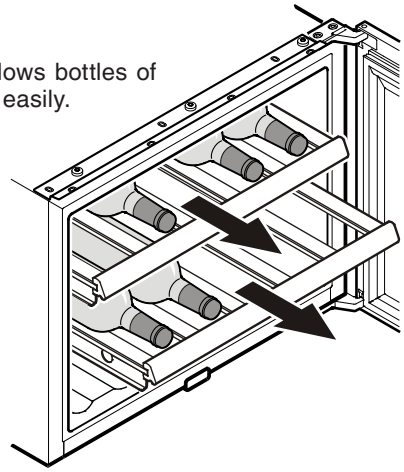

Tall wine bottles can also be stored crossways on the wooden shelves. To ensure stable storage of the bottles, click the retaining plates provided onto the middle slat of the wooden shelf.

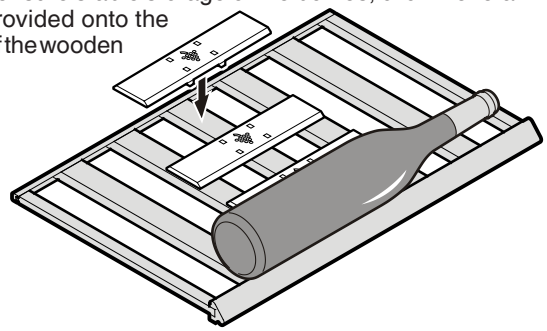

⚠ CAUTION!

Do not store bottles crossways on the interior floor! Otherwise, bottles may fall out when the appliance door is opened and this may cause injury or material damage.

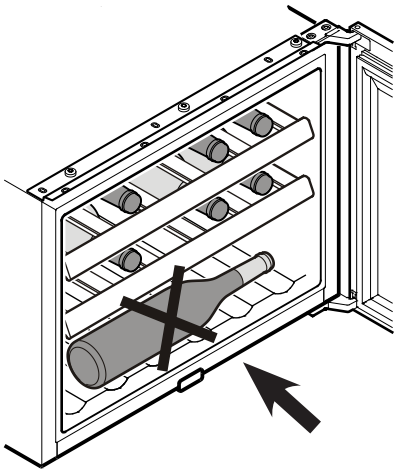

Storage diagram

(for 750 ml Bordeaux bottles) Total: 18 bottles

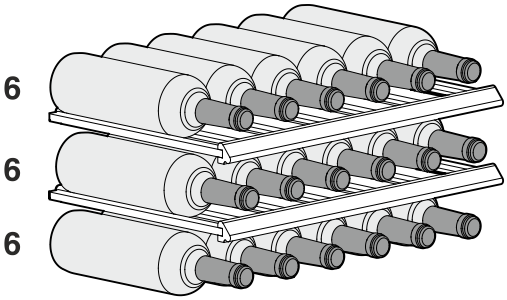

Saving energy

- Always ensure good ventilation. Do not cover ventilation openings or grille.
- Always keep fan louvres clear.
- Do not place appliance in areas of direct sunlight or next to a stove, heater or similar object.
- The energy consumption depends on the installation conditions, e.g. the ambient temperature.
- Keep the time the appliance is open to a minimum.

Interior light

The interior light will always switch on when the appliance door is opened.

Press the **Light** button if you want the interior light to be on even when the door is closed.



Furthermore, the brightness of the lighting can be adjusted.

- Press the **Light** button.
- Press and hold the **Light** button and at the same time press the temperature setting buttons to increase or decrease the brightness.



The light intensity of the LED light corresponds to laser class 1/1M.

⚠ Important

The light cover may only be removed by customer service staff.

If the cover is removed, do not look directly at the light through optical lenses from close distance. This can damage your eyes.

Lighting	
Class[1]	**Light source**
This product contains a light source that meets energy efficiency rating G	LED

[1] The appliance may contain light sources with different energy efficiency classes. The lowest energy efficiency class is indicated.

Air exchange with activated charcoal filter

The way in which wines continue to mature depends on the ambient conditions. The quality of the air is therefore decisive for preserving the wine. We recommend that you replace the illustrated filter once a year. Filters can be obtained from your dealer.

Changing the filter:
Take the filter by the handle. Turn it 90° to the left or right and remove.

Inserting the filter:
Insert with the handle in a vertical position. Turn it 90° to the left or right until it clicks into place.

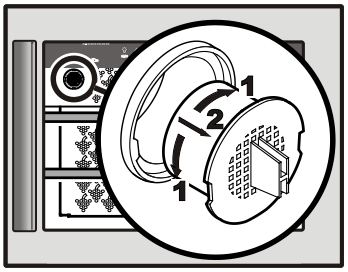

Shutting your appliance down

If your appliance is to be shut down for any length of time, switch it off and disconnect the plug or switch off or unscrew the fuse. Clean the appliance and leave the door open in order to prevent unpleasant smells.

The appliance complies with the relevant safety regulations and EU Directives 2014/30/EU and 2014/35/EU.

Cleaning

Before cleaning, always switch off the appliance. Disconnect from the mains or switch off or unscrew the fuse.

- Clean the inside and outer walls with lukewarm water and a little detergent. Do not use abrasive or acid cleaners or chemical solvents.
- Use a glass cleaner to clean the glass surfaces and a commercially available stainless-steel cleaning agent for the stainless-steel surfaces.

Do not use steam cleaners because of the risk of injury and damage.

- Ensure that no cleaning water penetrates into the electrical components or ventilation grille.
- Do not damage or remove the type plate on the inside of the appliance. It is very important for servicing purposes.

Malfunctions

- **F1 appears in the display.**

– The appliance has suffered a fault. Contact the customer service department.

You may be able to rectify the following faults by checking the possible causes yourself.

- **Appliance does not function:**

– Is the appliance switched on?
– Is the plug correctly fitted in the mains socket?
– Is the fuse intact?

- **When inserting the mains plug, the refrigeration unit does not switch on, but a value is shown in the temperature display.**

– Demo mode is activated. Contact the customer service department.

- **Loud running noise:**

– Is the appliance set up firmly on the floor?
– Does the appliance cause nearby items of furniture or objects to vibrate? Please note that noises caused by the refrigerant circuit cannot be avoided.

- **The temperature is not low enough:**

– Is the temperature setting correct (see "Setting the temperature")?
– Does the separately installed thermometer show the correct reading?
– Is the ventilation system working properly?
– Is the appliance set up too close to a heat source?

If none of the above causes apply and you cannot rectify the fault yourself, contact the nearest customer service department stating the type designation (1), service number (2) and appliance number (3) as indicated on the type plate.

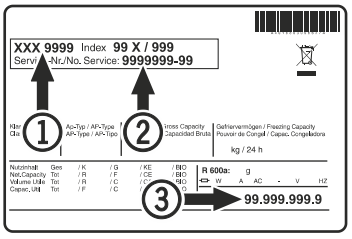

The position of the type plate is shown in the section entitled **Description of the appliance**.

Liebherr Hausgeräte Lienz GmbH
Dr.-Hans-Liebherr-Strasse 1
A-9900 Lienz
Österreich
www.liebherr.com

tehnoteka

https://cenoteka.rs

Ovaj dokument je originalno proizveden i objavljen od strane proizvođača, brenda Liebherr, i preuzet je sa njihove zvanične stranice. S obzirom na ovu činjenicu, Cenoteka ističe da ne preuzima odgovornost za tačnost, celovitost ili pouzdanost informacija, podataka, mišljenja, saveta ili izjava sadržanih u ovom dokumentu.

Napominjemo da Cenoteka nema ovlašćenje da izvrši bilo kakve izmene ili dopune na ovom dokumentu, stoga nismo odgovorni za eventualne greške, propuste ili netačnosti koje se mogu naći unutar njega. Cenoteka ne odgovara za štetu nanesenu korisnicima pri upotrebi netačnih podataka. Ukoliko imate dodatna pitanja o proizvodu, ljubazno vas molimo da kontaktirate direktno proizvođača kako biste dobili sve detaljne informacije.

Za najnovije informacije o ceni, dostupnim akcijama i tehničkim karakteristikama proizvoda koji se pominje u ovom dokumentu, molimo posetite našu stranicu klikom na sledeći link:

https://cenoteka.rs/p/liebherr-ugradna-vinska-vitrina-wkees-553/