tehnoteka

https://cenoteka.rs

Uputstvo za upotrebu (EN)

BENQ monitor 31.5" IPS 4K MA320UP (Nano Gloss za MacBook)



Cenoteka je online destinacija za upoređivanje cena i karakteristika bele tehnike, potrošačke elektronike i IT uređaja kod trgovinskih lanaca i internet prodavnica u Srbiji. Naša stranica vam omogućava da istražite najnovije informacije, detaljne karakteristike i konkurentne cene proizvoda.

Posetite nas i uživajte u ekskluzivnom iskustvu pametne kupovine klikom na link:

https://cenoteka.rs/p/benq-monitor-315-ips-4k-ma320up-nano-gloss-za-macbook/

LCD Monitor

User Manual

BenQ MA Series

Copyright

Copyright © 2026 by BenQ Corporation. All rights reserved. No part of this publication may be reproduced, transmitted, transcribed, stored in a retrieval system or translated into any language or computer language, in any form or by any means, electronic, mechanical, magnetic, optical, chemical, manual or otherwise, without the prior written permission of BenQ Corporation.

Disclaimer

BenQ Corporation makes no representations or warranties, either expressed or implied, with respect to the contents hereof and specifically disclaims any warranties, merchantability or fitness for any particular purpose. Further, BenQ Corporation reserves the right to revise this publication and to make changes from time to time in the contents hereof without obligation of BenQ Corporation to notify any person of such revision or changes.

BenQ flicker-free technology maintains a stable backlight with a DC dimmer that eliminates the primary cause of monitor flicker, making it easier on the eyes. The performance of flicker-free may be affected by external factors such as poor cable quality, unstable power supply, signal interference, or poor grounding, and not limited to the above mentioned external factors. (Applicable for flicker-free models only.)

MacBook® is a trademark of Apple Inc.

Product support

This document aims to provide the most updated and accurate information to customers, and thus all contents may be modified from time to time without prior notice. Please visit the website for the latest version of this document and other product information. Available files vary by model.

1. Make sure your computer is connected to the Internet.
2. Visit the local website from Support.BenQ.com. The website layout and content may vary by region/country.
   - User manual and related document
   - Drivers and applications
   - (EU only) Dismantled information: Available on the user manual download page. This document is provided based on Regulation (EU) 2019/2021 to repair or recycle your product. Always contact the local customer service for servicing within the warranty period. If you wish to repair an out-of-warranty product, you are recommended to go to a qualified service personnel and obtain repair parts from BenQ to ensure compatibility. Do not disassemble the product unless you are aware of the consequences. If you cannot find the dismantled information on your product, contact the local customer service for assistance.

Firmware upgrade

You are recommended to upgrade the product to the latest firmware version (if available) and refer to the most up-to-date user manual to make best use of the product.

To upgrade your monitor, download and install the **Display QuicKit** software from the BenQ website.

- Support.BenQ.com > model name > **Software & Driver** > **Display QuicKit** (available only when your monitor is compatible)
- Support.BenQ.com > **Display QuicKit** (availability may vary by region)

The software utility checks the compatibility of your monitor automatically once launched. Refer to the user manual of the software utility for instructions.

If your monitor is not compatible with **Display QuicKit**, and you wonder if there is an updated firmware version available, please contact BenQ customer service.

Advanced software

Apart from the built-in technologies and features available on this product, you are provided with more software applications to enhance and extend the product functionality. Download the software and its user guide as instructed from the BenQ website.

- **Display Pilot 2**

Display Pilot 2 is a software utility that allows for quick accurate tuning of the display with the ability to easily save and use monitor configurations that are best suited for you. All adjustments are controlled via software to eliminate the need to use the monitor on-screen displays (OSD).

EPREL Registration Number:

MA270S: 2526285
MA270U: 1961937
MA270UP: 2458157
MA320UG: 2526300
MA320U: 1961968
MA320UP: 2458173

Q&A index

Start with the topics that you are interested in.

Setup

How to set up the monitor and turn it on?

Safety precautions 6
How to assemble your monitor hardware 24
Adjusting the monitor height 30

How to connect with a MacBook product?

Working with a Mac series product 21

How to adjust the monitor viewing angle?

Viewing angle adjustment 32

How to view a vertical image on the monitor?

Rotating the monitor 31

How to wall mount the monitor?

Mounting the monitor 33

Menus and accessories

How to use the OSD menu?

5-way controller and basic menu operations 35
Navigating the main menu 37

Useful tools to enhance efficiency

How can I efficiently manage the display settings?

Display Pilot 2 3
Controlling the display with Display Pilot 2 37
Choosing an appropriate Color Mode 38
Choosing an appropriate Audio Mode 41
Adjust Display System Settings 42

How to split my screen to show two sources at the same time?

Working with two video sources (PBP) (MA270S/MA320UG only) 46

How to connect two or more monitors to have more screen space?

Connecting multiple monitors via Daisy Chain (MA270S/MA320UG only) 47

Can I control two computers with one set of keyboard and mouse?

Sharing a set of keyboard, mouse and other USB peripherals with KVM (MA270S/MA320UG only) 48

What settings are available and applied to each color mode?

Customizing each Color Mode 38
Adjustable display settings 46

Can I charge my device via the monitor’s USB-C™/Thunderbolt™ port?

Power delivery of USB-C™ port on your monitor 22

Power delivery of Thunderbolt™ 4 port on your monitor (MA270S/MA320UG only) 22

Can I charge my device when the monitor is in standby mode or powered off?

Charging the connected device with your monitor (Standby Charging & Power-off Charging)(MA270S/MA270UP/MA320UG/MA320UP only) 45

Maintenance and product support

How to clean the monitor?

Care and cleaning 8

Cleaning the LCD screen 11

How to keep the monitor not in use for a long time?

How to detach the stand and the base 29

Care and cleaning 8

I need more support.

Product support 3

Servicing 9

Safety precautions

Power safety

Please follow these safety instructions for best performance, and long life for your monitor.



- The AC plug isolates this equipment from the AC supply.
- The power supply cord serves as a power disconnect device for pluggable equipment. The socket outlet should be installed near the equipment and be easily accessible.
- This product should be operated from the type of power indicated on the marked label. If you are not sure of the type of power available, consult your dealer or local power company.
- The Class I pluggable equipment Type A must be connected to protective earth.
- An approved power cord greater or equal to H03VV-F or H05VV-F, 2G or 3G, 0.75mm^2 must be used.
- Use only the power cord provided by BenQ. Never use a power cord that appears to be damaged or frayed.
- To avoid possible damage to the monitor, do not use it in a region where power supply is unstable.
- Ensure that the power cord is connected to a grounded power outlet before turning on the monitor.
- To avoid possible danger, observe the total electric load when using the monitor with a (multi-outlet) extension cord.
- Always turn off the monitor before unplugging the power cord.

For Germany only:

- (If the weight of the product is less than or equal to 3 kg) An approved power cord greater or equal to H03VV-F, 3G, 0.75mm^2 must be used.
- (If the weight of the product is more than 3 kg) An approved power cord greater or equal to H05VV-F or H05RR-F, 3G, 0.75mm^2 must be used.
- (If a remote control is provided) RISK OF EXPLOSION IF BATTERY IS REPLACED BY AN INCORRECT TYPE. DISPOSE OF USED BATTERIES ACCORDING TO THE INSTRUCTIONS.

For models with adapter:

- Use only the power adapter supplied with your LCD Monitor. Use of another type of power adapter will result in malfunction and/or danger.
- Allow adequate ventilation around the adapter when using it to operate the device or charge the battery. Do not cover the power adapter with paper or other objects that will reduce cooling. Do not use the power adapter while it is inside a carrying case.
- Connect the power adapter to a proper power source.
- Do not attempt to service the power adapter. There are no service parts inside. Replace the unit if it is damaged or exposed to excess moisture.

Installation

- Do not use your monitor under any of the following environmental conditions:
  - Extremely high or low temperature, or in direct sunlight
  - Dusty places
  - Highly humid, exposed to rain, or close to water
  - Exposed to vibrations or impacts in places such as cars, buses, trains, and other rail vehicles
  - Near heating appliances such as radiators, heaters, fuel stoves, and other heat-generating items (including audio amplifiers)
  - An enclosed place (such as a closet or bookcase) without appropriate ventilation
  - An uneven or sloping surface
  - Exposed to chemical substances or smoke
- Carry the monitor carefully.
- Do not place heavy loads on the monitor to avoid possible personal injury or damage to the monitor.
- Ensure that children do not hang or climb onto the monitor.
- Keep all packing bags out of reach of children.

Operation

- To protect your eyesight, please refer to the user manual to set the optimal screen resolution and the viewing distance.
- To reduce eye fatigue, take a break on a regular basis while using the monitor.
- Avoid taking either one of the following actions for a long time. Otherwise, burn marks may occur.
  - Play images that cannot occupy the screen entirely.
  - Place a still image on the screen.
- To avoid possible damage to the monitor, do not touch the monitor panel by finger tip, pen, or any other sharp objects.
- Excessively frequent plug and unplug of video connectors may cause damage to the monitor.
- This monitor is designed mainly for personal use. If you want to use the monitor in a public place or a harsh environment, contact your nearest BenQ service center for assistance.
- To avoid possible electric shock, do not dissemble or repair the monitor.
- If a bad smell or an abnormal sound appears to come from the monitor, contact your nearest BenQ service center for assistance immediately.

Caution

- The distance between you and the monitor should be 2.5 to 3 times the diagonal width of the screen.
- Looking at the screen for an extended period of time causes eye fatigue and may deteriorate your eyesight. Rest your eyes for 5 ~ 10 minutes for every 1 hour of product use.
- Reduce your eye strain by focusing on objects far away.
- Frequent blinking and eye exercise help keep your eyes from drying out.

Safety notice for remote control (applicable if a remote control is provided)

- Do not put the remote control in the direct heat, humidity, and avoid fire.
- Do not drop the remote control.
- Do not expose the remote control to water or moisture. Failure to do so could result in malfunction.
- Confirm there is no object between the remote control and the remote sensor of the product.
- When the remote control will not be used for an extended period, remove the batteries.

Battery safety notice (applicable if a remote control is provided)

The use of the wrong type of batteries may cause chemical leaks or explosion. Please note the following:

- Always ensure that the batteries are inserted with the positive and negative terminals in the correct direction as shown in the battery compartment.
- Different types of batteries have different characteristics. Do not mix different types.
- Do not mix old and new batteries. Mixing old and new batteries will shorten battery life or cause chemical leaks from the old batteries.
- When batteries fail to function, replace them immediately.
- Chemicals which leak from batteries may cause skin irritation. If any chemical matter seeps out of the batteries, wipe it up immediately using a dry cloth, and replace the batteries as soon as possible.
- Due to varying storage conditions, the battery life for the batteries included with your product may be shortened. Replace them within 3 months or as soon as you can after initial use.
- There may be local restrictions on the disposal or recycling of batteries. Consult your local regulations or waste disposal provider.

If the supplied remote control contains a coin / button cell battery, pay attention to the following notice as well.

- Do not ingest battery. Chemical Burn Hazard.
- The remote control supplied with this product contains a coin / button cell battery. If the coin / button cell battery is swallowed, it can cause severe internal burns in just 2 hours and can lead to death.
- Keep new and used batteries away from children. If the battery compartment does not close securely, stop using the product and keep it away from children.
- If you think batteries might have been swallowed or placed inside any part of the body, seek immediate medical attention.

Care and cleaning

- Do not place the monitor face down on the floor or a desk surface directly. Otherwise, scratches on the panel surface may occur.
- The equipment is to be secured to the building structure before operation.
- (For models that support wall or ceiling mounting)
    - Install your monitor and monitor mounting kit on a wall with flat surface.

  - Ensure that the wall material and the standard wall mount bracket (purchased separately) are stable enough to support the weight of the monitor.
  - Turn off the monitor and the power before disconnecting the cables from the LCD monitor.
- Always unplug the product from the power outlet before cleaning. To clean the monitor, see Cleaning the LCD screen on page 11 for more information.
- Slots and openings on the back or top of the cabinet are for ventilation. They must not be blocked or covered. Your monitor should never be placed near or over a radiator or heat sources, or in a built-in installation unless proper ventilation is provided.
- Do not place heavy loads on the monitor to avoid possible personal injury or damage to the monitor.
- Consider keeping the box and packaging in storage for use in the future when you may need to transport the monitor.
- Refer to the product label for information on model name, power rating, manufacturing date, barcode, serial number, and identification markings. The locations of labels vary by model. See the illustration below for where the labels can be.

Possible label location:

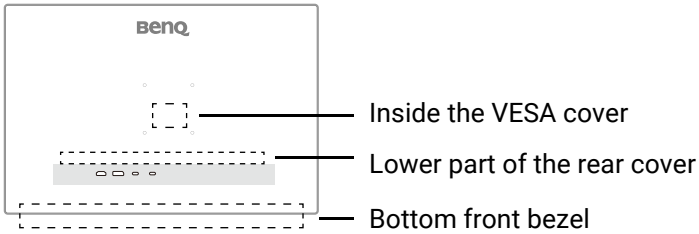

Servicing

- Do not attempt to service this product yourself, as opening or removing covers may expose you to dangerous voltages or other risks. If any of the above mentioned misuse or other accident such as dropping or mishandling occurs, contact qualified service personnel for servicing.
- For replacement of power cord, connection cables, remote control or power adapter, please contact BenQ customer service.
- Contact your place of purchase or visit the local website from Support.BenQ.com for more support.

Support.BenQ.com

General warranty information

Note that the monitor warranty may be void if any of the following conditions occurs:

- Documents required for warranty services have been altered by unauthorized use or is illegible.
- The model number or production number on the product has been altered, deleted, removed or made illegible.
- Repairs, modifications, or alterations have been made by unauthorized service organizations or persons.
- Damage caused by improper storage of the monitor (including but not limited to force majeure, direct exposure to sunlight, water, or fire).

- Reception problems occurred due to external signals (such as antenna, Cable TV) outside the monitor.
- Defects caused by abuse or misuse of the monitor.
- Before using the monitor, it is the sole responsibility of the user to check whether the monitor is compatible with local technical standards if the user brings the monitor out of its intended sales area. Failure to do so may cause product breakdown and the user will have to pay the repairing costs.
- It is the sole responsibility of the user if problems (such as data loss and system failure) occurred due to non-factory provided software, parts, and/or non-original accessories.
- Please use the original accessories (e.g. power cable) only with the device to avoid possible dangers such as electric shock and fire.

Typographics

Icon / Symbol	Item	Meaning
	Warning	Information mainly to prevent the damage to components, data, or personal injury caused by misuse and improper operation or behavior.
	Tip	Useful information for completing a task.
	Note	Supplementary information.

In this document, the steps needed to reach a menu may be shown in condensed form, for example: **Menu** > **System** > **Information**.

Cleaning the LCD screen

Please follow these safety instructions for best performance, and long life for your monitor.

As your monitor panel comes with a special coating, use and clean the monitor carefully.

- Stains on the monitor screen could be obvious. Be cautious when you use or clean the monitor and avoid getting oil or dust on the screen.
- Fingerprints and dust under normal use could be wiped away by a microfiber cleaning cloth.
- Clean the screen surface gently and carefully. Hard scrubbing could damage the screen coating.

Be sure to follow the instructions to clean the screen surface appropriately.

Using a microfiber cleaning cloth* (recommended)

You are recommended to use a microfiber cleaning cloth to clean your monitor screen. It is an eco-friendly design as it is reusable, washable, and liquid-free.

1. Unplug the monitor from the power outlet before cleaning.
2. Make sure there is no sharp debris on the cleaning cloth to avoid scratching the screen.
3. Hold the edge of the monitor and avoid excessive force on the screen.
4. Make sure the cleaning cloth is clean and dry. Start with a small, clean part of the cloth and wipe the stained area of the screen gently in circles. If it is still not clean, continue with another clean part of the cloth to avoid spreading the grease around. If both sides of the cloth are used and get dirty, wash and dry the cloth properly.

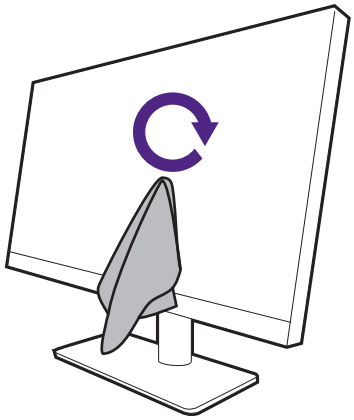

- *: The availability or the cleaning cloth varies by model. See Getting started on page 15 for your package contents.
- To prevent the seams around the cleaning cloth from marring the screen surface, avoid wiping the screen with the edge of the cleaning cloth.

5. If necessary, apply a small drop of alcohol-free screen cleaner on a small, clean part of the cleaning cloth, and wipe the stained area gently in circles. See Using a screen cleaner on page 12 for more information.

6. Use a clean part of the cloth to wipe dry the screen completely.If it is still not clean, continue with another clean part of the cloth to avoid spreading the grease around. Repeat this step until the screen is clean.

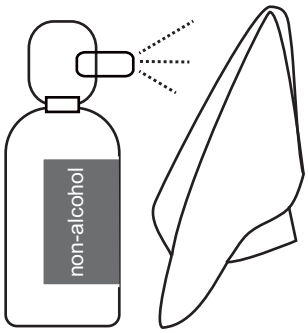

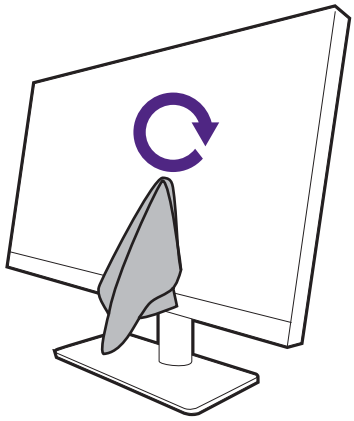

7. The cleaning cloth may get dirty after using several times and may not be able to clean the screen properly. Wash it with detergent and remove debris from it by hand if necessary. Keep it in a cool place until it is dry. Make sure it is completely dry before next cleaning.

Using a screen cleaner

- Use screen cleaning wipes which are pre-moistened and alcohol-free. You can wipe away oil and fingerprints easily.
- Use an alcohol-free screen cleaner kit. Spray on the microfiber cloth that came with the screen cleaner kit, and wipe stains off the screen. Never spray anything directly onto the screen.
- Make sure no liquid goes into the gap between the screen and the bezel. Liquids inside the monitor could cause short circuits.

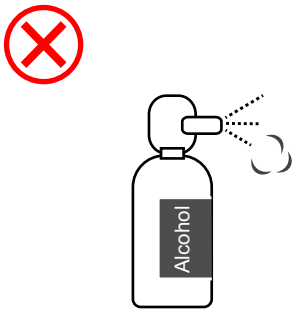

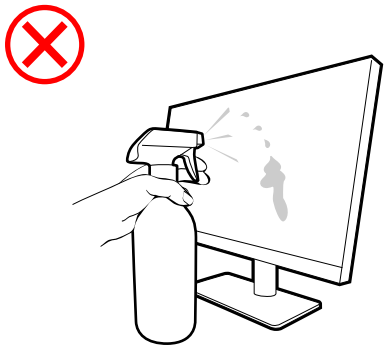

Table of Contents

Copyright 2

Product support 3

- Firmware upgrade 3
- Advanced software 3

Q&A index 4

Safety precautions 6

- Power safety 6
- Installation 7
- Operation 7
- Safety notice for remote control (applicable if a remote control is provided) 8
- Battery safety notice (applicable if a remote control is provided) 8
- Care and cleaning 8
- Servicing 9
- General warranty information 9

Cleaning the LCD screen 11

- Using a microfiber cleaning cloth* (recommended) 11
- Using a screen cleaner 12

Getting started 15

Getting to know your monitor 17

- Overview 17
- Connections 19
- Working with a Mac series product 21
- Connectivity of Thunderbolt™ 4 port on your monitor (MA270S/MA320UG only) 22
- Power delivery of USB-C™ port on your monitor 22

How to assemble your monitor hardware 24

- How to detach the stand and the base 29
- Adjusting the monitor height 30
- Rotating the monitor 31
- Viewing angle adjustment 32
- Mounting the monitor 33

How to adjust your monitor 34

- The control panel 34
- 5-way controller and basic menu operations 35
- Navigating the main menu 37
- Controlling the display with **Display Pilot 2** 37
- Choosing an appropriate **Color Mode** 38
- Choosing an appropriate **Audio Mode** 41
- Adjust **Display System Settings** 42
- Charging the connected device with your monitor

(**Standby Charging** & **Power-off Charging**)
(MA270S/MA270UP/MA320UG/MA320UP only) 45
Adjustable display settings 46
Working with two video sources (**PBP**) (MA270S/MA320UG only) 46
Displaying two color settings at the same time
(**DualView Plus**) (MA270S/MA320UG only) 47
Connecting multiple monitors via Daisy Chain (MA270S/MA320UG only) 47
Sharing a set of keyboard, mouse and other USB peripherals with KVM
(MA270S/MA320UG only) 48
Troubleshooting 50
Frequently asked questions (FAQ) 50
Need more help? 53

Getting started

When unpacking please check you have the following items. If any are missing or damaged, please contact the place of purchase for a replacement.

LCD Monitor	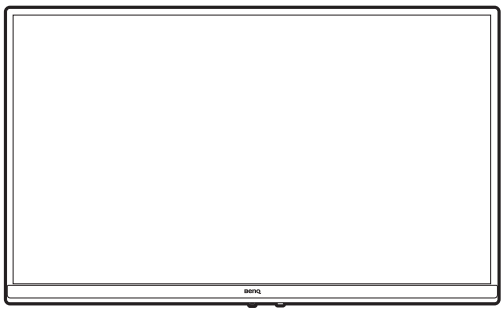
Monitor Stand	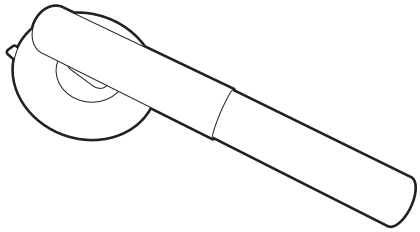
Monitor Base	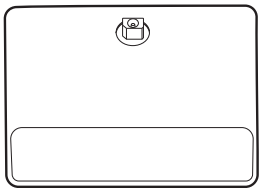
Cable Holder	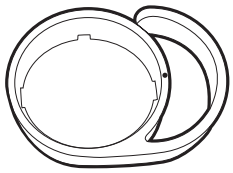
User documents • Quick Start Guide • Safety Instructions • Regulatory Statements	
Power Cord (Supplied item may differ by model or region.)	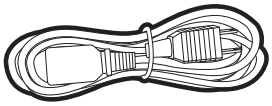
Video Cable: HDMI (Selected models only)	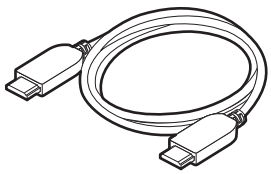
Video Cable: Thunderbolt™ (Selected models only)	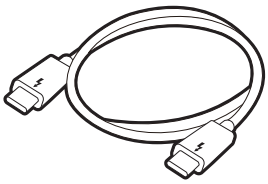

USB Cable: USB-C™	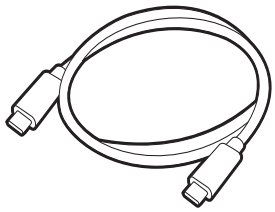
Screen cleaning cloth (Selected models only)	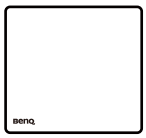

- Available accessories and the pictures shown here may differ from the actual contents and the product supplied for your region. And the package contents may subject to change without prior notice. For cables that are not supplied with your product, you can purchase them separately.
- Consider keeping the box and packaging in storage for use in the future when you may need to transport the monitor. The fitted foam packing is ideal for protecting the monitor during transport.
- Accessories and cables may be included or sold separately depending on the product supplied for your region.

- Always keep the product and accessories out of reach of small children.
- This equipment is not suitable for use in locations where children are likely to be present.

Getting to know your monitor

Overview

MA270U / MA270UP / MA320U / MA320UP

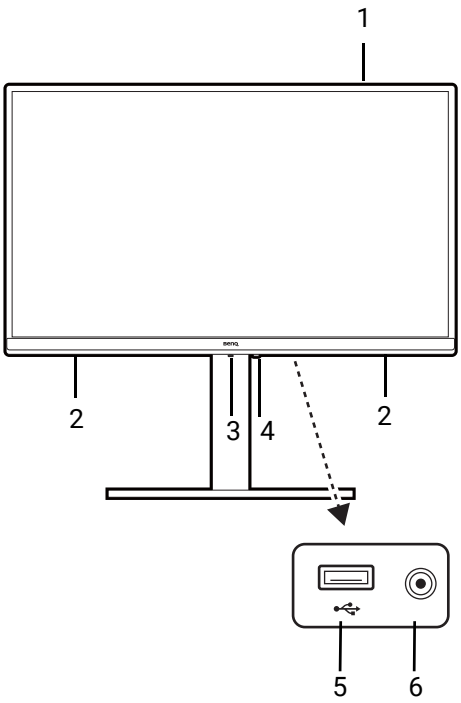

1. Light sensor
2. Speakers
3. 5-way controller
4. Power button and power LED indicator
5. (Other models) USB 3.2 Gen1 Type-A downstream port (for data transfer and power delivery up to 7.5W)
6. Headphone jack

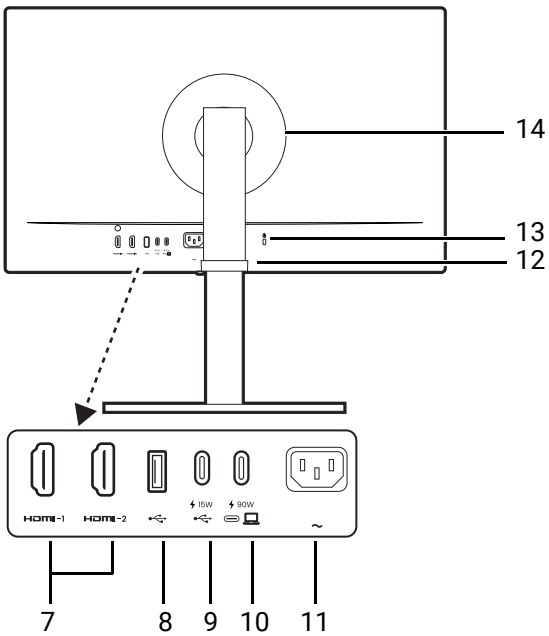

7. HDMI socket
8. USB 3.2 Gen1 Type-A downstream port (for data transfer and power delivery up to 7.5W)
9. USB 3.2 Gen1 Type-C downstream port (for data transfer and power delivery up to 15W)
10. USB-C™ port (for video, data transfer and power delivery up to 90W)
11. AC power input jack
12. Cable management
13. Kensington lock slot
14. VESA cover

- Depending on the product specifications, the supported resolution and timing may vary.
- Above diagram may vary depending on the model.
- Picture may differ from product supplied for your region.
- (Applicable for products with white case) The case of the product may turn yellow in about 3 years due to the photo-oxidation reactions induced by light. This is a normal phenomenon and should not be considered as manufacturing defect.

MA270S / MA320UG

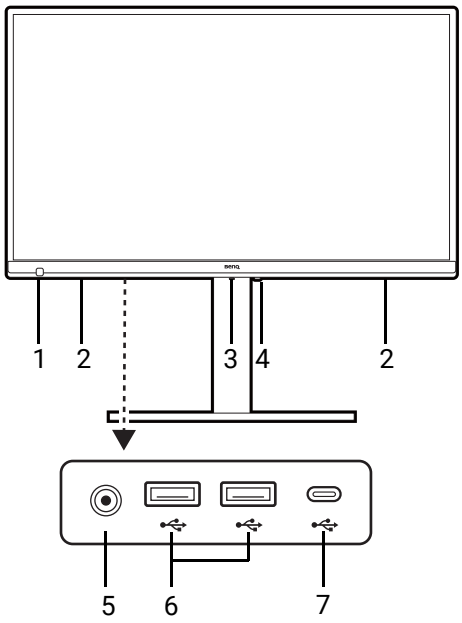

1. Light sensor
2. Speakers
3. 5-way controller
4. Power button and power LED indicator
5. Headphone jack
6. USB 3.2 Gen2 Type-A downstream port (for data transfer and power delivery up to 7.5W)
7. USB 3.2 Gen2 Type-C downstream port (for data transfer and power delivery up to 15W)

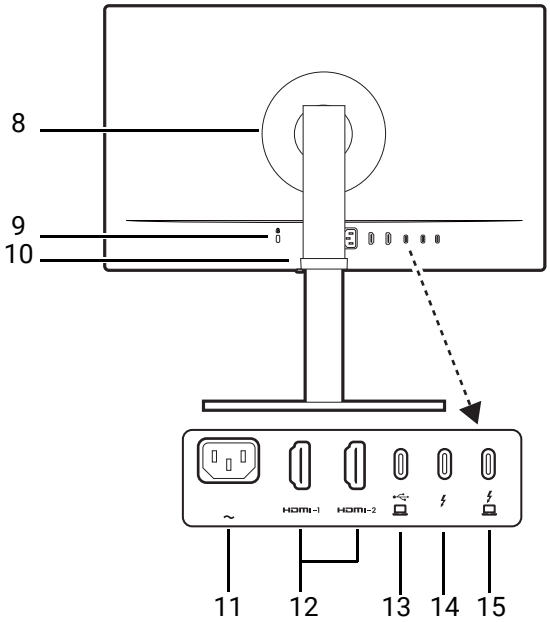

8. VESA cover
9. Kensington lock slot
10. Cable management
11. AC power input jack
12. HDMI socket
13. USB-C™ port (for video, data transfer and power delivery up to 35W)
14. Thunderbolt™ 4 socket 2 (*, for video out in daisy chain and power deliver up to 15W)
15. Thunderbolt™ 4 socket 1 (**, for video, data transfer and power delivery up to 96W)

- *: 1) Thunderbolt™ 4 with up to 40Gbs bandwidth; 2) supports up to two 4K monitors by daisy chain; 3) power delivery up to 15W. See USB-C Configuration on page 44 for more information.
- **: 1) Thunderbolt™ 4 with up to 40Gbs bandwidth; 2) supports up to two 4K monitors by daisy chain; 3) power delivery up to 96W. See USB-C Configuration on page 44 for more information.
- The USB data transmission speed varies according to your selection in USB-C Configuration on page 44.
- Depending on the product specifications, the supported resolution and timing may vary.
- Above diagram may vary depending on the model.
- Picture may differ from product supplied for your region.
- (Applicable for products with white case) The case of the product may turn yellow in about 3 years due to the photo-oxidation reactions induced by light. This is a normal phenomenon and should not be considered as manufacturing defect.

Connections

The following connection illustrations are for your reference only. For cables that are not supplied with your product, you can purchase them separately.

For detailed connection methods, see page 26 - 27.

MA270U / MA270UP / MA320U / MA320UP

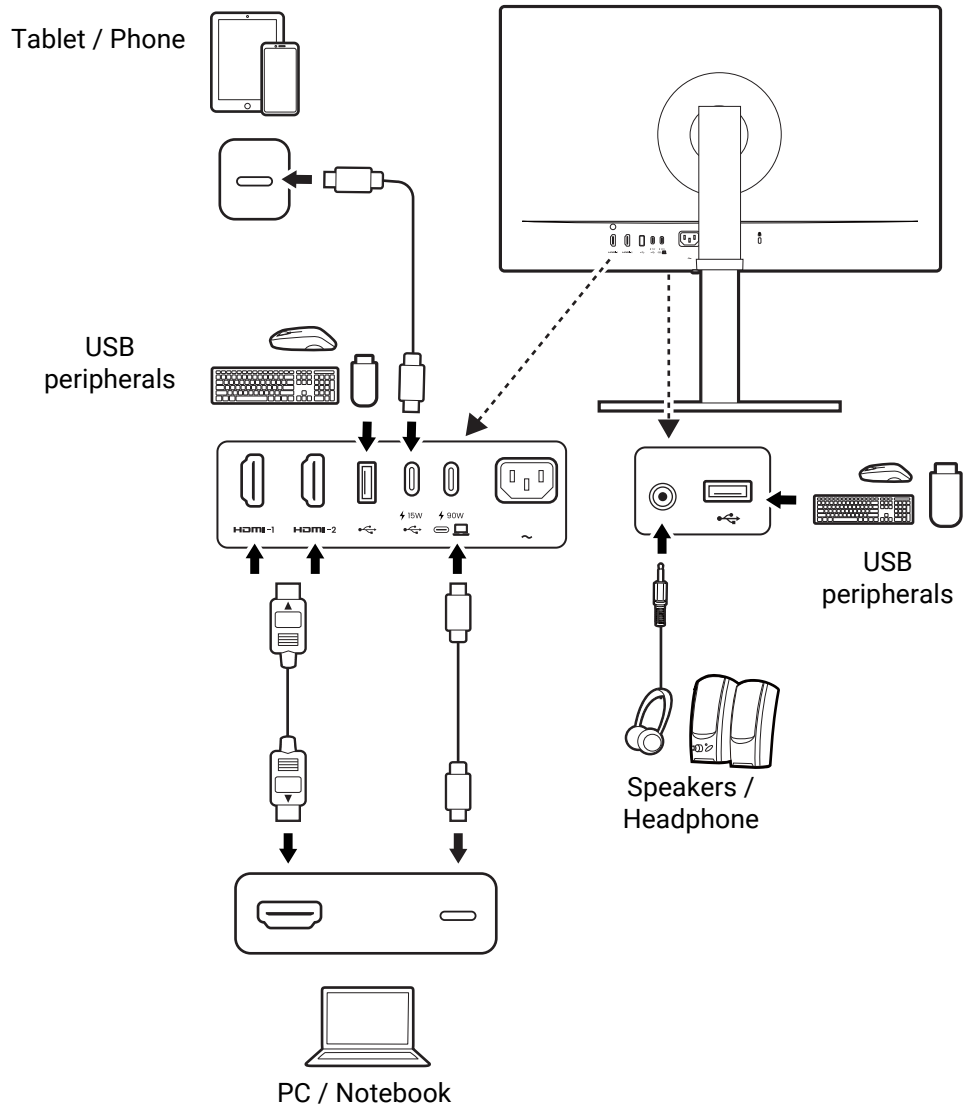

MA270S / MA320UG

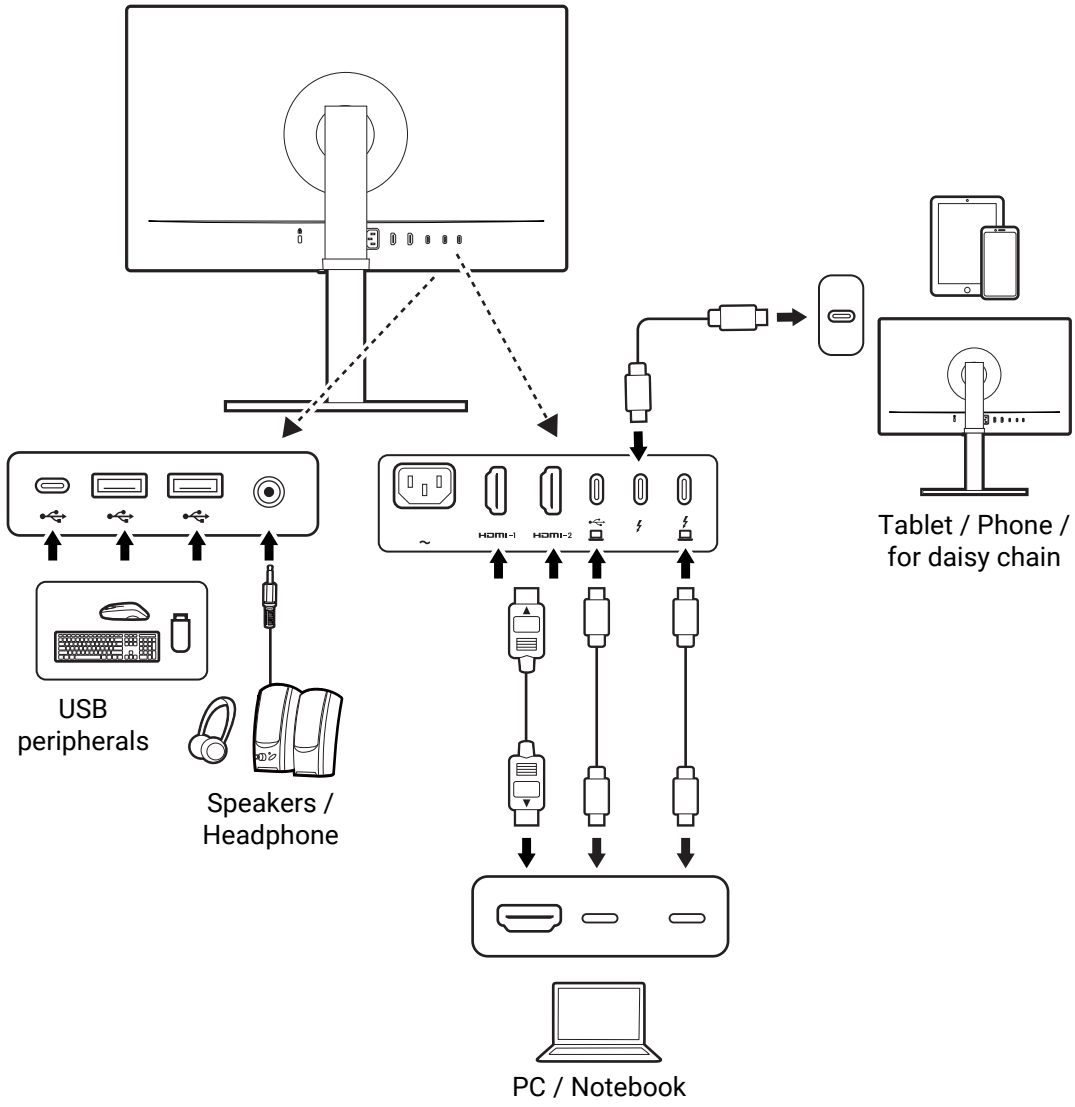

Working with a Mac series product

You can connect your monitor to a Mac series product. Note the compatibility is up to the performance and specifications of the Mac chip on your Mac product and may be updated without prior notice.

- When connecting your monitor to a Mac product, direct connection via Thunderbolt™ or USB-C™ cable (if available on both Mac and the monitor) is recommended to ensure good image quality. See Connect the PC video cable on page 26 for details.
- To reduce the color difference, you are recommended to set the picture mode (color mode) of your monitor to **M-book**, or **Display P3** mode (if available). See Choosing an appropriate Color Mode on page 38 for details.
- If your monitor supports certain BenQ software, check the software webpage from www.BenQ.com to see if they work on your Mac product.

If you have any inquiries about the compatibilities with Mac products, visit Support.BenQ.com and look for related topics from **FAQ** or **Knowledge**.

Connectivity of Thunderbolt™ 4 port on your monitor (MA270S/MA320UG only)

The Thunderbolt™ 4 ports on your product are compatible with Thunderbolt™ 4 and USB-C™ connectors. The connectivity, however, may vary depending on the cable used and the capability of the connected computer.

Computer's port for connection	Cable for connection	Monitor's port for connection	Connectivity
Thunderbolt™ port	• Passive Thunderbolt™ 4 cable (as provided) • USB-C™ cable (as provided)	Thunderbolt™ 4 port	OK
USB-C™ port	Passive Thunderbolt™ 4 cable (as provided)	Thunderbolt™ 4 port	OK
USB-C™ port	Active Thunderbolt™ 4 cable (purchased separately)	Thunderbolt™ 4 port	OK
USB-C™ port	USB-C™ cable (as provided)	Thunderbolt™ 4 port	OK

Power delivery of Thunderbolt™ 4 port on your monitor (MA270S/MA320UG only)

With the power delivery function, your monitor helps supply power to the connected Thunderbolt™ 4 devices. Available power varies by port. Make sure the devices are connected to the appropriate ports to be activated properly with sufficient power.

Thunderbolt 1 ()	Thunderbolt 2 ()
5V / 3A	5V / 3A
9V / 3A	N/A
12V / 3A	N/A
15V / 3A	N/A
20V / 4.8A	N/A

Power delivery of USB-C™ port on your monitor

With the power delivery function, your monitor helps supply power to the connected USB-C™ devices.

MA270U / MA270UP / MA320U / MA320UP

USB-C™ 90W (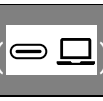)	USB-C™ downstream 15W ()
5V / 3A	5V / 3A
9V / 3A	N/A

USB-C™ 90W ( )	USB-C™ downstream 15W ( )
12V / 3A	N/A
15V / 3A	N/A
20V / 4.5A	N/A

MA270S / MA320UG

USB-C™ 35W ( ) (MA270S/MA320UG only)	USB-C™ downstream 15W ( )
5V / 3A	5V / 3A
9V / 3A	N/A
12V / 2.91A	N/A
15V / 2.33A	N/A
20V / 1.75A	N/A

- A connected device needs to be equipped with a USB-C™ connector that supports charging function via USB power delivery.
- The connected device can be charged via USB-C™ port even when the monitor is in power saving mode. (*)
- The USB power delivery is up to 90W or 96W (depending on the model). If the connected device requires more than the delivered power for operation or for boot up (when the battery is drained), use the original power adapter that came with the device.
- The information is based on the standard testing criteria and is provided for reference. The compatibility is not guaranteed as the user environments vary. If a separately purchased USB-C™ cable is used, make sure the cable is certified by USB-IF and is full-featured, with power delivery and video / audio / data transfer functions.

*: Charging via USB-C™ in monitor power saving mode and power off mode is available when the **USB-C Awake** function is enabled. To enable the function, download the bundled software **Display Pilot 2** from BenQ website. In **Display Pilot 2**, go to (**Settings**) > **Advanced** > **Display System Settings**, set **USB-C Awake**, **Standby Charging**, **Power-off Charging** to **ON**.

How to assemble your monitor hardware

- If the computer is turned on you must turn it off before continuing. Do not plug-in or turn-on the power to the monitor until instructed to do so.
- The following illustrations are for your reference only. The location and available input and output jacks may vary depending on the purchased model.

Avoid finger pressure on the screen surface.

Never stand your monitor on a desk or floor without its stand arm and base. The controls on the bottom of the front bezel are not designed to hold the weight of the monitor and may be damaged.

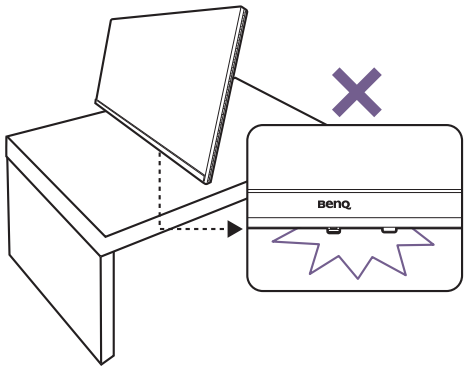

1. Attach the monitor base.

Please be careful to prevent damage to the monitor. Placing the screen surface on an object like a stapler or a mouse will crack the glass or damage the LCD substrate voiding your warranty. Sliding or scraping the monitor around on your desk will scratch or damage the monitor surround and controls.

Open the box, remove the cushion that protects the back of the monitor. And take out the monitor stand and base. Packaging may differ by model.

Protect the monitor and screen by clearing a flat open area on your desk and placing a soft item like the monitor packaging bag on the desk for padding.

Gently lay the screen face up on a flat clean padded surface.

MA270U/MA270UP/MA320U/MA320UP

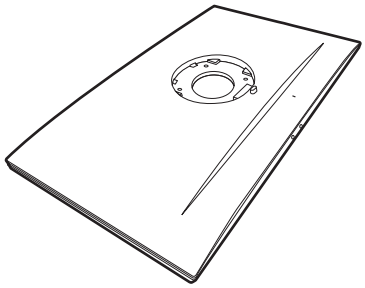

MA270S/MA320UG

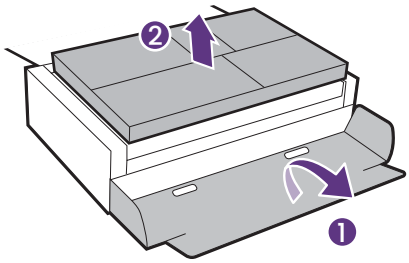

Align the cable holder with the monitor stand as illustrated. Push them together until they click and lock into place.

The cable holder can be installed in either orientation. However, to ensure proper cable routing, its opening should face away from the I/O ports.

MA270U/MA270UP/MA320U/MA320UP

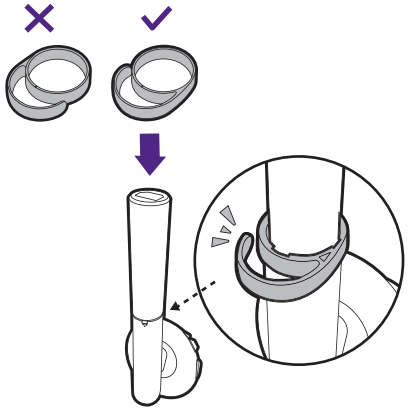

MA270S/MA320UG

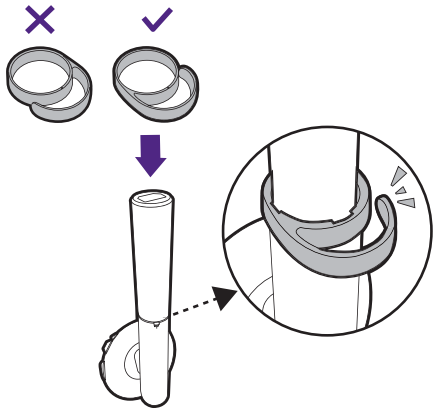

Attach the monitor stand to the monitor base as illustrated.

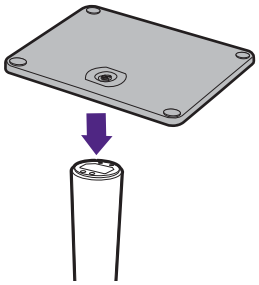

Raise the thumbscrew lid on the bottom of the monitor stand and tighten the thumbscrew as illustrated.

Push the lid back.

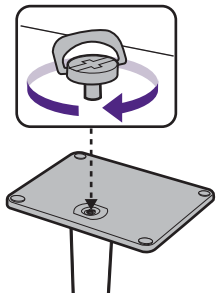

Orient and align the stand arm with the monitor (❶), push them together until they click and lock into place (❷).

Gently attempt to pull them back apart to check that they have properly engaged.

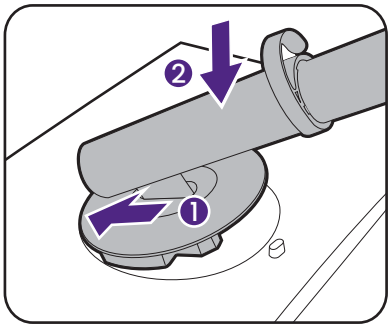

Carefully lift the monitor, turn it over and place it upright on its stand on a flat even surface. Always hold the monitor from its handle.

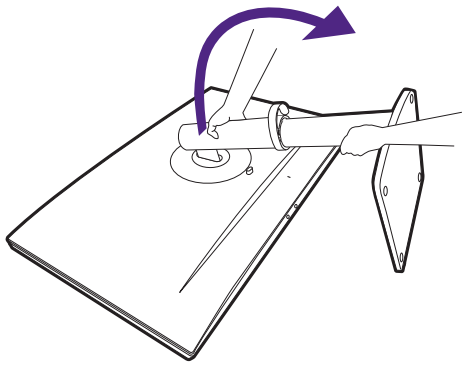

2. Connect the PC video cable

The video cables included in your package and the socket illustrations on the right may vary depending on the product supplied for your region.

Establish a video cable connection. Connect the monitor to your video source(s) via HDMI/USB-C™/Thunderbolt™ cable(s) as illustrated.

MA270U/MA270UP/MA320U/MA320UP

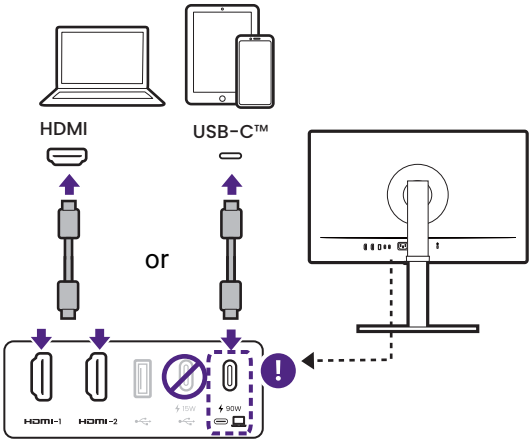

MA270S/MA320UG

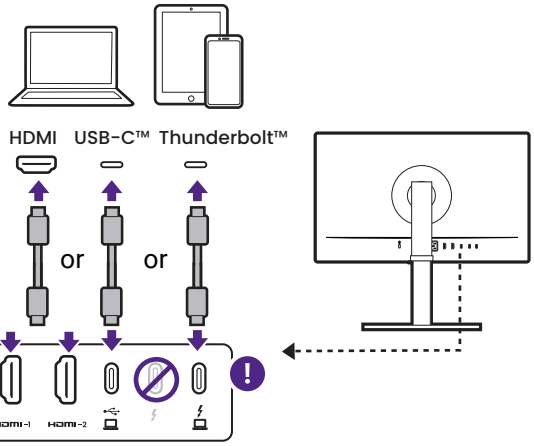

3. Connect the headphone.

You may connect the headphones to the headphone jack found below the lower-right of the front bezel.

MA270U/MA270UP/MA320U/MA320UP

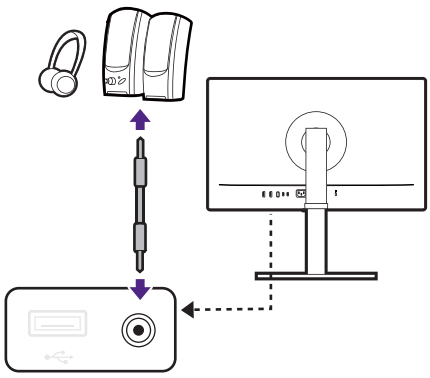

MA270S/MA320UG

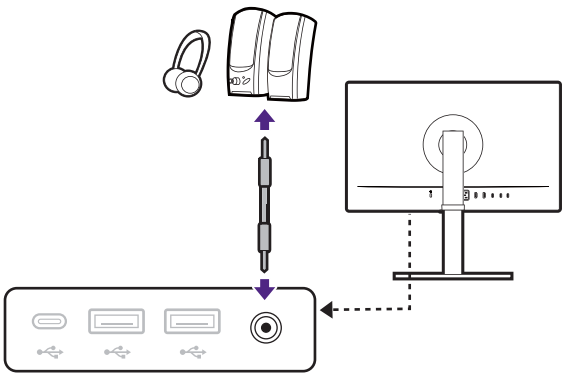

4. Connect the USB devices.

1. Connect the video source via USB-C™ video port (/).
2. Connect the USB devices via other USB ports (downstream) on the monitor. These downstream USB ports transmit data between the connected USB devices and the upstream port.

MA270U/MA270UP/MA320U/MA320UP

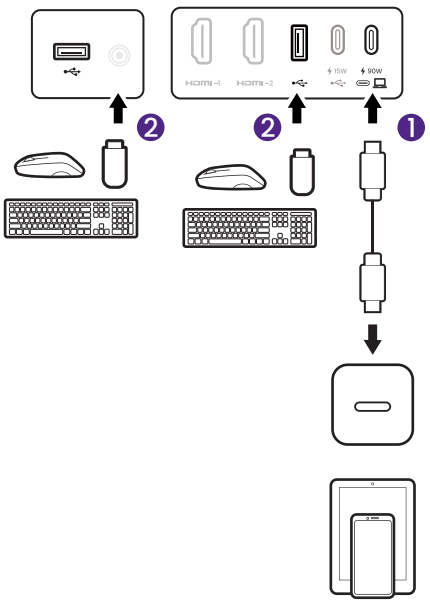

MA270S/MA320UG

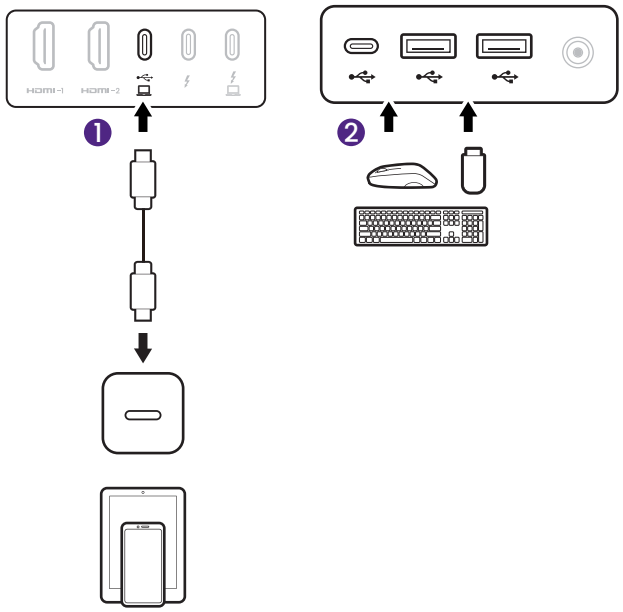

5. Adjust the viewing angle.

You may position the screen to the desired angle with monitor tilt, swivel, and height adjustment functions. Check the product specifications on the website for details. See Adjusting the monitor height on page 30 for more information.

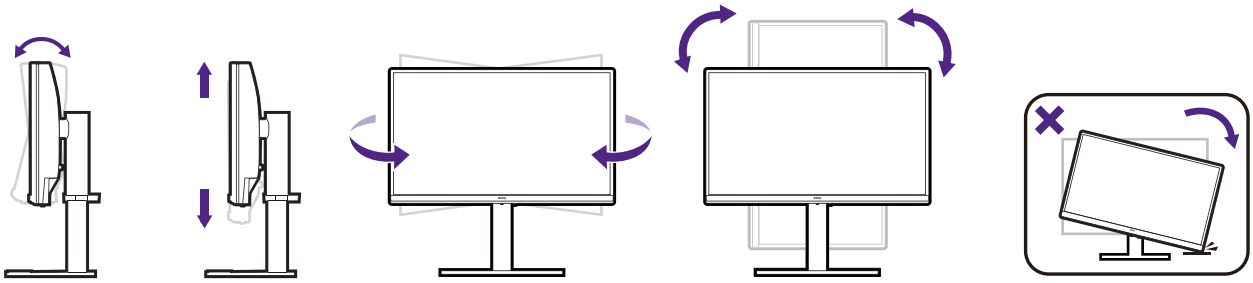

Your monitor is an edge-to-edge monitor and should be handled with care. Avoid finger pressure on the screen surface. Adjust the screen angle by placing your hands on the top and on the bottom of the monitor as illustrated.

6. Connect the power cable.

1. Plug one end of the power cord into the socket labelled ~ on the rear of the monitor.
2. Plug the other end of the power cord into a power outlet.

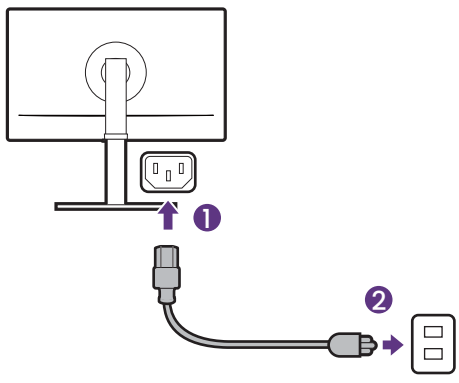

Picture may differ from product supplied for your region.

7. Organize the cables.

Route the cables via the cable holder.

The opening of the cable holder may be different as illustrated, according to its installation orientation.

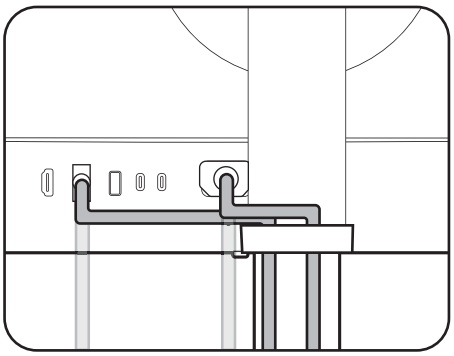

8. Turn on the power.

Turn on the monitor by pressing the power button on the monitor.

Turn on the computer too.

To extend the service life of the product, we recommend that you use your computer's power management function.

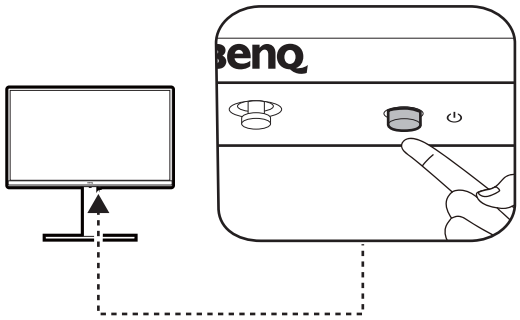

How to detach the stand and the base

1. Prepare the monitor and area.

Turn off the monitor and the power before unplugging the power cable. Turn off the computer before unplugging the monitor signal cable.

Protect the monitor and screen by clearing a flat open area on your desk and placing a soft item like a towel on the desk for padding, before laying the screen face down on a flat clean padded surface.

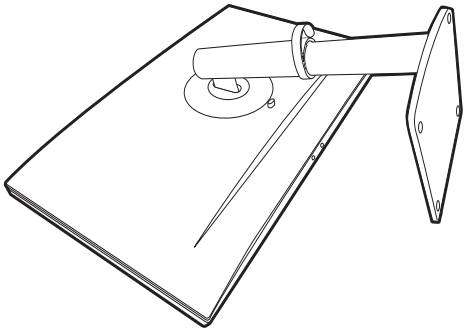

Please be careful to prevent damage to the monitor. Placing the screen surface on an object like a stapler or a mouse will crack the glass or damage the LCD substrate voiding your warranty. Sliding or scraping the monitor around on your desk will scratch or damage the monitor surround and controls.

2. Remove the monitor stand.

While pressing and holding the quick release button (1), detach the stand from the monitor (2 and 3).

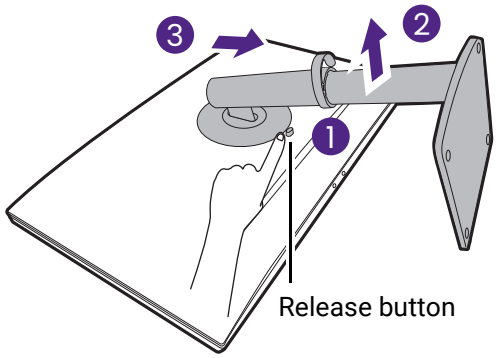

3. Remove the monitor base.

Release the thumbscrew on the bottom of the monitor base.

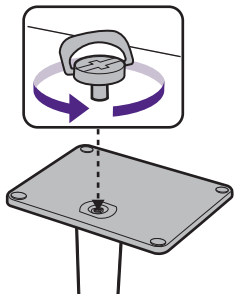

And then detach the base from the stand.

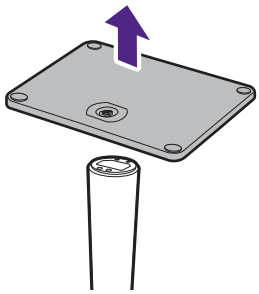

Adjusting the monitor height

To adjust the monitor height, hold both the left and the right sides of the monitor to lower the monitor or lift it up to the desired height.

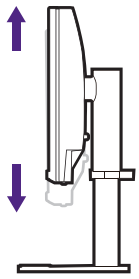

- Avoid placing hands on the upper or lower part of the height-adjustable stand or at the bottom of the monitor, as ascending or descending monitor might cause personal injuries. Keep children out of reach of the monitor while performing this operation.

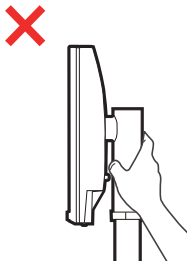

Rotating the monitor

1. Pivot the display.

Before rotating the monitor with a portrait viewing orientation, the display has to be rotated 90 degrees.

Right-click the desktop and select **Screen resolution** from the popup menu. Select **Portrait** in **Orientation**, and apply the setting.

Depending on the operating system on your PC, different procedures should be followed to adjust the screen orientation. Refer to the help document of your operating system for details.

2. Disconnect the cables

To avoid the risk of damaging the cables, always disconnect all cables before you rotate the monitor.

3. Fully extend the monitor and tilt it.

Gently lift the display up and extend it to the maximum extended position. Then tilt the monitor.

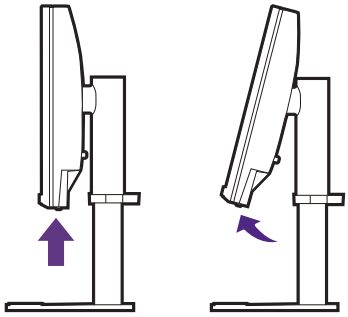

The monitor should be vertically extended to allow to rotate from landscape to portrait mode.

4. Rotate the monitor 90 degrees clockwise or counterclockwise as illustrated.

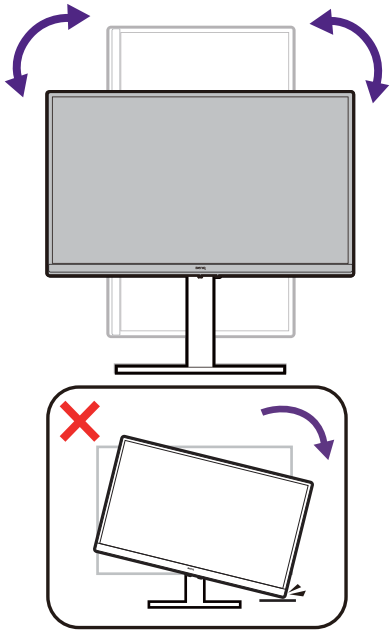

To avoid the edge of the LCD display hitting the monitor base surface while it is being rotated, do tilt and extend the monitor to the highest position before you start to rotate the display. You should also make sure there are no obstacles around the monitor and there is enough room for cables. Remove the items placed on the monitor base, the connected USB peripherals and cables first.

5. Adjust the monitor to the desired viewing angle.

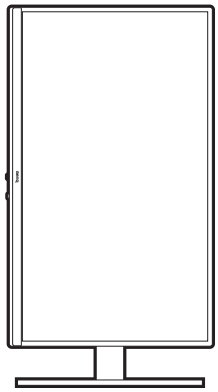

6. Organize the cables.

Connect and route the cables via the cable holder.

Viewing angle adjustment

You may position the screen to the desired angle with monitor tilt, swivel, and height adjustment functions. Check the product specifications on the website for details.

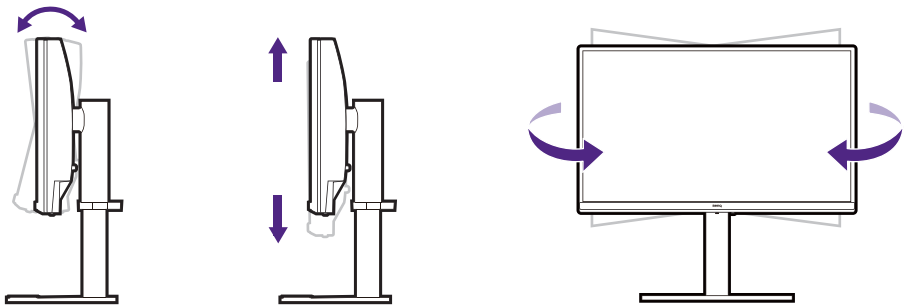

Mounting the monitor

The back of your LCD monitor has a VESA standard mount with 100mm pattern, allowing the installation of a wall mount bracket or a monitor arm (both purchased separately).

Before starting to mount your monitor, please read the precautions carefully.

You can visit BenQ website for available monitor arms.

Precautions

- Install your monitor and monitor mounting kit on a wall/desk with flat surface.
- Ensure that the wall/tabletop material and the standard wall/desk mount bracket (purchased separately) are stable enough to support the weight of the monitor. Refer to the product specifications on the website for weight information.
- Turn off the monitor and the power before disconnecting the cables from the LCD monitor.

1. Remove the monitor stand.

Lay the screen face down on a clean and well-padded surface. Detach the monitor stand as instructed in step 1~2 in How to detach the stand and the base on page 29.

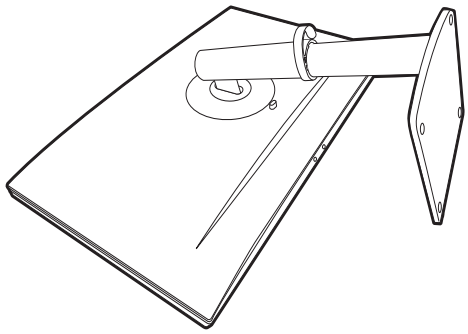

2. Remove the screws on the back cover.

Use a cross-pointed screwdriver to release the screws on the back cover. The use of a magnetic-head screwdriver is recommended to avoid of losing the screws.

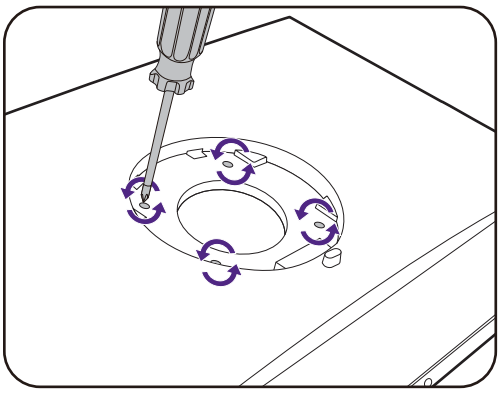

In case you intend to use your monitor on the stand in the future, please keep the monitor base, monitor stand, and screws somewhere safe for future use.

3. Follow the instruction manuals of the wall/desk mount bracket you purchased to complete the installation.

Use four M4 x 10 mm screws to fix a VESA standard wall mount bracket to the monitor. Make sure that all screws are tightened and secured properly. Consult a professional technician or BenQ service for wall mount installation and safety precautions.

How to adjust your monitor

The control panel

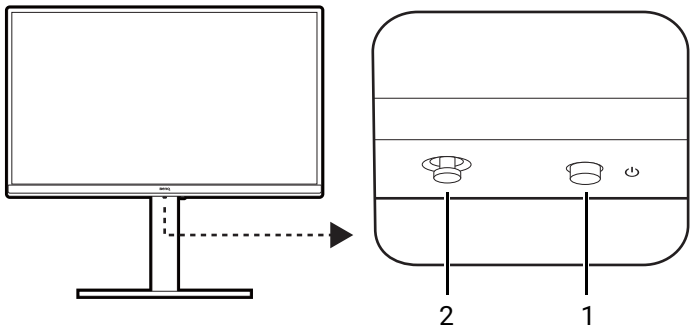

No.	Name	Description
1.	Power button	Turns the power on or off.
2.	5-way controller	Accesses the functions or menu items as instructed by the on-screen icons. See 5-way controller and basic menu operations on page 35 for more information.

5-way controller and basic menu operations

The 5-way controller is located below the lower part of the front bezel. While sitting in front of the monitor, move the controller to the directions instructed by the on-screen icons for menu navigation and operations.

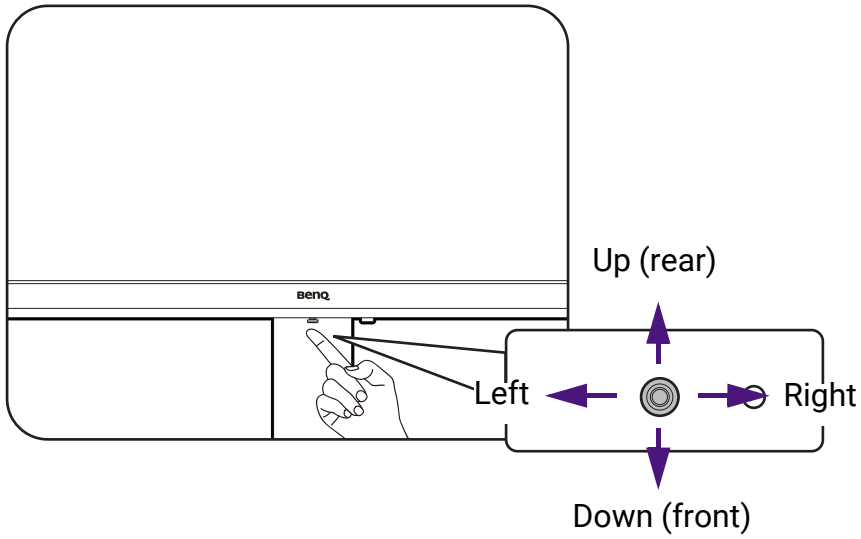

5-way controller operation	Function
(When no menu has been activated)	
Press the 5-way controller	Activates the main menu.
Press the 5-way controller for 3 seconds	Resets all menu settings.
(When a menu has been activated)	
Press	• Confirms the selection. • Exits the main menu.
Move to the right	Goes to the next menu.
Move up	• Goes to the previous menu item. • For up / increase adjustment.
Move down	• Goes to the next menu item. • For down / decrease adjustment.
Move to the left	Returns to the previous menu.

You can use the OSD menu to adjust basic settings on your monitor. To adjust more settings, please download **Display Pilot 2** software.

1 2

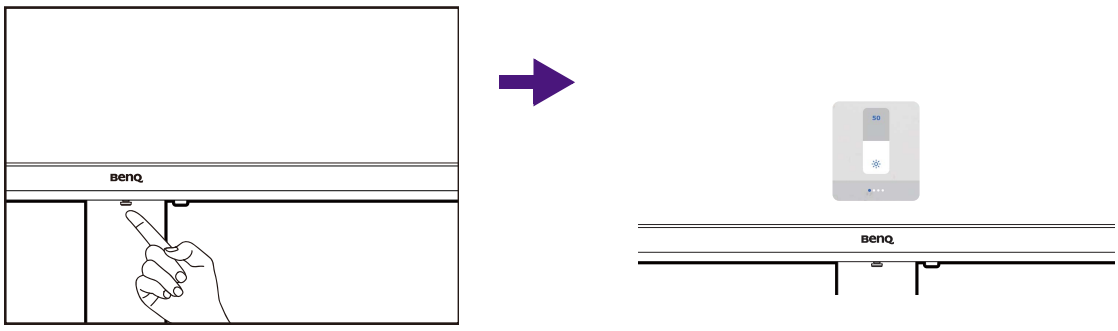

1. Press the 5-way controller to bring up the main menu.
2. Move the 5-way controller to make adjustments or selection.

Navigating the main menu

You can use the OSD (On Screen Display) menu to adjust basic settings on your monitor. Press the 5-way controller to bring up the main menu. See 5-way controller and basic menu operations on page 35 for details.

Available menu options may vary depending on the input sources, functions and settings. Menu options that are not available will become grayed out.

The OSD menu languages may differ from the product supplied to your region, see Language on page 42 for more details.



No.	Name	Function	Range
1.	**Brightness**	Adjusts the balance between light and dark shades.	0 to 100
2.	**Volume**	Adjusts the audio volume.	0 to 50
3.	**Input**	Detect the input sources connected and to choose from.	(MA270U/MA270UP/ MA320U/MA320UP) • **USB-C** • **HDMI-1** • **HDMI-2** (MA270S/MA320UG) • **Thunderbolt** • **USB-C** • **HDMI-1** • **HDMI-2**
4.	**Information**	Displays the current monitor property settings.	• **Model Name** • **HDR** • **Current Resolution** • **Display Pilot 2** QR code

Controlling the display with **Display Pilot 2**

The **Display Pilot 2** software is provided as an alternative to control the display. Download and install from Support.BenQ.com (see Product support on page 3).

The main functions include:

• Control of the main functions / configurations of the monitor.

• Setup of color mode and audio mode.
• Additional tools to extend the monitor's functionalities.

For more information, visit Support.BenQ.com for **Display Pilot 2** manual.

To find out the supported operating systems, visit BenQ website.

Choosing an appropriate **Color Mode**

Your monitor provides various color modes that are suitable for different types of images. Download **Display Pilot 2** software for all the available color modes. In **Display Pilot 2**, go to **Color Mode** for a desired color mode.

Item	Function
M-book	Minimizes the visual differences between the monitor and the connected MacBook series product.
Display P3	For better color matching representation with Standard Display P3.
sRGB	For better color matching representation with the peripheral devices, such as printers, digital cameras, etc.
Cinema	For viewing videos. Enhances contrast and saturation for better image clarity and color enrichment.
Game	For playing video games, emphasize details like textured leather, solid stone, and flickering fire.
HDR	For better color matching representation with High Dynamic Range (HDR) technology. Available only when the HDR content is detected.
Coding (MA270U/MA320U only)	For coding environment in dark theme.
ePaper	For reading e-books or documents in black and white with suitable on-screen brightness and clear texts.
User	Applies a combination of picture settings defined by users.

Customizing each **Color Mode**

For different color modes, you can further adjust the color settings for detailed color adjustment.The available options for each color mode may vary.

Item	Function	Range
Brightness	Adjusts the balance between light and dark shades.	0 ~ 100
Contrast	Adjusts the degree of difference between darkness and lightness.	0 ~ 100
Sharpness	Adjusts the clarity and visibility of the edges of the subjects in the image.	1 ~ 10

Item	Function		Range
Color Temperature	**6500K**	Allows video and still photographs to be viewed with natural coloring. This is the factory default color.	
	9300K	Applies a cool tint to the image and is factory pre-set to the PC industry standard white color.	
	5000K	Applies a warm tint to the image and is factory pre-set to the news print standard white color.	
	User Define	The blend of the Red, Green and Blue primary colors can be altered to change the color tint of the image. Go to the succeeding **R** (red), **G** (green), and **B** (blue) menus to change the settings. Decreasing one or more of the colors will reduce their respective influence on the color tint of the image. (e.g. if you reduce the Blue level the image will gradually take on a yellowish tint. If you reduce Green, the image will become a magenta tint.)	• **R** (0 ~ 100) • **G** (0 ~ 100) • **B** (0 ~ 100)
Gamma	Adjusts the tone luminance.		• **1.8** • **2.0** • **2.2** • **2.4** • **2.6** • **sRGB**
Color Gamut	**P3**	For better color matching representation with Standard P3.	
	sRGB	Suitable for sRGB compatible peripherals.	
	Native	For better color matching representation with the native color gamut.	
Hue	Adjusts the degree of how we perceive colors.		• **R** (0 ~ 100) • **G** (0 ~ 100) • **B** (0 ~ 100) • **C** (0 ~ 100) • **M** (0 ~ 100) • **Y** (0 ~ 100)

Item	Function	Range
Saturation	Adjusts the purity degree of colors.	• **R** (0 ~ 100) • **G** (0 ~ 100) • **B** (0 ~ 100) • **C** (0 ~ 100) • **M** (0 ~ 100) • **Y** (0 ~ 100)
Uniformity (MA270S/MA320UG only)	If activated, this function compensates for color tone variations across the display area, so the whole display area looks uniform in color.	• **ON** • **OFF**
Reset Color	Resets the custom color settings to the factory defaults.	• **YES** • **NO**

Available settings to each **Color Mode**

In **Display Pilot 2**, depending on the **Color Mode** you just set, the available settings or options for each color adjustment may vary. The list is for reference only as available options also vary by input. Settings that are not available will become grayed out.

Color Mode Options	M-book	Display P3	sRGB	Cinema	Game	HDR	Coding	ePaper	User
Brightness	V	V	V	V	V	V(1)	V	V	V
Contrast	V	V	V	V	V	V(1)	V	V	V
Sharpness	V	V	V	V	V	V	V	V	V
Color Temperature (6500K / 9300K / 5000K)	X	X	X	X	X	X	X	X	V(2)
Color Temperature (User Define R/G/B)	V(2)	X	X	X	X	X	X	X	V(2)
Gamma	X	X	X	X	X	X	X	X	V
Color Gamut	X	X	X	X	X	X	X	X	V
Hue	X	X	X	X	X	X	X	X	V
Saturation	X	X	X	X	X	X	X	X	V
Uniformity (MA270S/MA320UG only)	V	V	V	V	V	X	X	V	V
Backlight Control	X	X	X	X	X	V	X	X	X
Visual Optimizer	V	X	X	V	V	X	V	V	V
Low Blue Light	V	X	X	V	V	X	V	V	V
Color Weakness	X	X	X	V	V	X	V	X	V

- V: Available.
- X: Not available.
- (1): Available only when **Backlight Control** is disabled or grayed out.
- (2): Available only when **Visual Optimizer** is disabled, or **Visual Optimizer** is enabled and **Parameter** is set to **Brightness**.

Choosing an appropriate **Audio Mode**

Your monitor provides various audio modes that are suitable for different types of media content. Download **Display Pilot 2** software for all the available audio modes. In **Display Pilot 2**, go to **Audio** > **Audio Mode** for a desired audio mode.

Item	Function
Standard	Balances all settings for use without a specific scenario.
Dialogue	Cancels noise to improve sound clarity.
Music	Keeps the music and the vocal in harmony as if in live.
Cinema	Enhances the bass while keeps the vocal clear.
Game	Enhances the sound positioning so you can identify the location or origin of detailed sounds, e.g., a flying bullet or an enemy's footsteps.

Adjust **Display System Settings**

There is a variety of advanced system settings allow you to customize your display experience. Through **Display Pilot 2** software, you can customize your display preferences, manage power options, and optimize performance for various tasks. In **Display Pilot 2**, go to (**Settings**) > **Advanced** > **Display System Settings** for all the available system settings.

Available menu options may vary depending on the input sources, functions and settings. Menu options that are not available will become grayed out. For models without certain functions, their settings and related items will not appear on the menu.

Item	Function	Range
Language	Sets the OSD menu language. The language options displayed on your OSD may differ from those shown on the right, depending on the product supplied in your region.	• **English** • **Français** • **Deutsch** • **Italiano** • **Español** • **Polski** • **Česky** • **Magyar** • **Română** • **Nederlands** • **Русский** • **Svenska** • **Português** • **日本語** • 繁體中文 • **简体中文** • العربية • 한국어 • **Українська** • **Български** • **Ελληνικά**
Resolution Notice	Sets whether to display the resolution notice of the recommended resolution when a new input source is detected by the monitor.	• **ON** • **OFF**

Item	Function		Range
Display Mode	This feature is provided to allow aspect ratios other than 16:9 to be displayed without geometric distortion.  The options under **Display Mode** will be different depending on the input signal sources.  Depending on your selection of **Mode**, different **Display Mode** option is pre-set. Change the setting if needed		
	Full	Scales the input image to fill the screen. Ideal for 16:9 aspect images.	
	Aspect	The input image is displayed without geometric distortion filling as much of the display as possible.	
	1:1	Displays the input image in its native resolution without scaling.	
Power LED Indicator	Sets whether to display the power button's LED indicator.		• **ON** • **OFF**
Auto Power Off	Sets the time to power off the monitor automatically in power saving mode.		• **OFF** • **10 min** • **20 min** • **30 min**
Input Auto Scan	Sets to automatically detect the available input source.		• **ON** • **OFF**
Auto Scan Interval	Sets the auto-scan interval time to suit different preferences or source devices to ensure transitions.		• **Short** • **Standard**
USB-C Awake	When both **Power-on Charging** and **Standby Charging** are **ON**, this feature allows your connected device to wake the monitor from standby mode via Thunderbolt™/USB-C™ or Hub.		• **ON** • **OFF**
Power-on Charging (MA270S / MA270UP / MA320UG / MA320UP only)	Keep your Thunderbolt™/USB-C™ upstream charging your device; disabling **Power-on Charging** also disables **Standby Charging**.		• **ON** • **OFF**
Standby Charging (MA270S / MA270UP / MA320UG / MA320UP only)	Keep your Thunderbolt™/USB-C™ and Hub charging in standby mode when both **USB-C Awake** and **Power-on Charging** are **ON**.		• **ON** • **OFF**

Item	Function		Range
Power-off Charging (MA270S / MA270UP / MA320UG / MA320UP only)	Keep your Thunderbolt™/USB-C™ and Hub charging in power-off mode when **USB-C Awake** is **ON**.		• **ON** • **OFF**
AMA	Improves the gray level response time of the LCD panel.		• **OFF** • **High** • **Premium**
FreeSync (MA320UG only)	Switches FreeSync on or off. Monitors featuring with the FreeSync will eliminate screen tearing, stuttering, and juddering during gaming. If this function is enabled, the FreeSync and HDR functions are activated, with the support of your monitor, the graphic card, and the input of HDR content. Available FreeSync function varies by content. For any questions related to FreeSync™ performance, please refer to www.AMD.com.		• **ON** • **OFF**
USB-C Configuration	Sets the refresh rate of the input video via USB-C™ port. The USB transmission speed changes accordingly due to USB-C™ technology limitation.		
	(MA270U/MA320U/MA270UP/MA320UP)		
	USB 3.2 Gen 1	Refresh rate: 3840 x 2160 @ 30Hz USB transmission speed: 5 Gbps	
	USB 2.0	Refresh rate: 3840 x 2160 @ 60Hz USB transmission speed: 480 Mbps	
	(MA270S)		
	USB 3.2 Gen 2	Refresh rate: 3840 x 2160 @ 30Hz USB transmission speed: 10 Gbps	
	USB 2.0	Refresh rate: 5120 x 2880 @ 60Hz USB transmission speed: 480 Mbps	
	(MA320UG)		
	USB 3.2 Gen 2	Refresh rate: 3840 x 2160 @ 30Hz USB transmission speed: 10 Gbps	
	USB 2.0	Refresh rate: 3840 x 2160 @ 60Hz USB transmission speed: 480 Mbps	

Item	Function	Range
Deep Sleep	When enabled, the monitor enters deep sleep when the power button is pressed, consuming less power. When disabled, the monitor turns off the backlight without entering deep sleep when the power button is pressed, allowing it to wake up more quickly.	• **ON** • **OFF**
RGB PC Range	Determines the range of color scales. Select an option that matches the RGB range setting on the connected HDMI device.	• **Auto Detect** • **Full (0~255)** • **Limited (16~235)**
Backlight Control	(Available only when the input is HDR-compatible.) Once enabled, the monitor may flicker when playing HDR content as the backlight changes dynamically with the content. This is a normal phenomenon. You can disable this function as desired.	• **ON** • **OFF**

Charging the connected device with your monitor (**Standby Charging** & **Power-off Charging**)(MA270S/MA270UP/MA320UG/MA320UP only)

The USB-C™/ Thunderbolt™ port and the USB hub (e.g. USB-C downstream port and USB-A downstream port) of your monitor support power delivery even when your monitor is in standby or power off mode, yet it is disabled by default.

Follow the steps below to turn on the power delivery function.

1. Turn on **USB-C Awake**.
   - If video source via USB-C™ / Thunderbolt™ port is detected, you will be prompted to enable this function. Select **YES** to proceed.
   - You can also turn on **USB-C Awake** manually. Go to **Display Pilot 2** > (**Settings**) > **Advanced** > **Display System Settings**. Set **USB-C Awake** to **ON**.
2. The display supports charging connected device when your monitor is in standby mode or is powered off. In **Display Pilot 2**, go to (**Settings**) > **Advanced** > **Display System Settings** and set **Standby Charging** or **Power-off Charging** to **ON**.

The maximum power delivery of each USB port varies. To charge a device properly, check its charging specification first and make sure an appropriate USB port is connected.

Adjustable display settings

While some settings (e.g. OSD language) are changed and take effect immediately regardless of other monitor settings or input, most settings can be adjusted and saved to go with color modes or inputs. As a color mode or an input is selected, the desired settings are applied.

Item	Description
Brightness	Saved and applied by color mode switch.
Brightness by **Visual Optimizer**	
Contrast	
Sharpness	
Color Temperature	
Gamma	
Color Gamut	
Hue	
Saturation	
Uniformity (MA320UG only)	
Visual Optimizer	
Low Blue Light	
Color Weakness	
Color Mode	Saved and applied by input switch.
Audio Scenario	
Volume	
Display Mode	
AMA	
RGB PC Range	
USB-C Configuration	Saved and applied by USB-C™ / Thunderbolt™ input.

Working with two video sources (**PBP**) (MA270S/MA320UG only)

The Picture-by-Picture (PBP) mode allows to display images from two video sources side-by-side.

1. Connect your video sources via Thunderbolt ( ) and USB-C™ ( ) ports.
2. In **Display Pilot 2**, go to **PBP** and enable the function. Select to split the screen evenly with a larger section.

   - (1:1): For inputs from two Mac products.

- (2:1): For inputs from one Mac and one tablet
- (3:1): For inputs from one Mac and one smartphone

3. If you prefer to apply different color modes to each window in PBP mode, see Displaying two color settings at the same time (DualView Plus) (MA270S/MA320UG only) on page 47.

Displaying two color settings at the same time (**DualView Plus**) (MA270S/MA320UG only)

DualView Plus helps improve your working efficiency by showing two different color modes side-by-side. This function supports both single and dual inputs, offering more flexible application options.

1. In **Display Pilot 2**, go to **DualView Plus** to enable this function.The screen is divided into two windows. The current color mode is applied to the left window.
2. Select one color mode for the right window.

Connecting multiple monitors via Daisy Chain (MA270S/MA320UG only)

With monitor connection via Thunderbolt™ 4 ports, you can output content to up to 6 devices (including 2 monitors) via daisy chain function.

1. Connect your laptop (with Thunderbolt connectivity) to the Thunderbolt™ 4 port ( ) on the monitor using the Thunderbolt™ cable that came with your monitor. This port supplies power to the laptop.
2. Connect the second monitor to the first one using a Thunderbolt™ 4 cable (purchased separately) as illustrated. Make sure the purchased cable is Thunderbolt™ 4-certified (with Thunderbolt™ 4 logo printed on the package and/or on the cable) and is more than one-meter long.

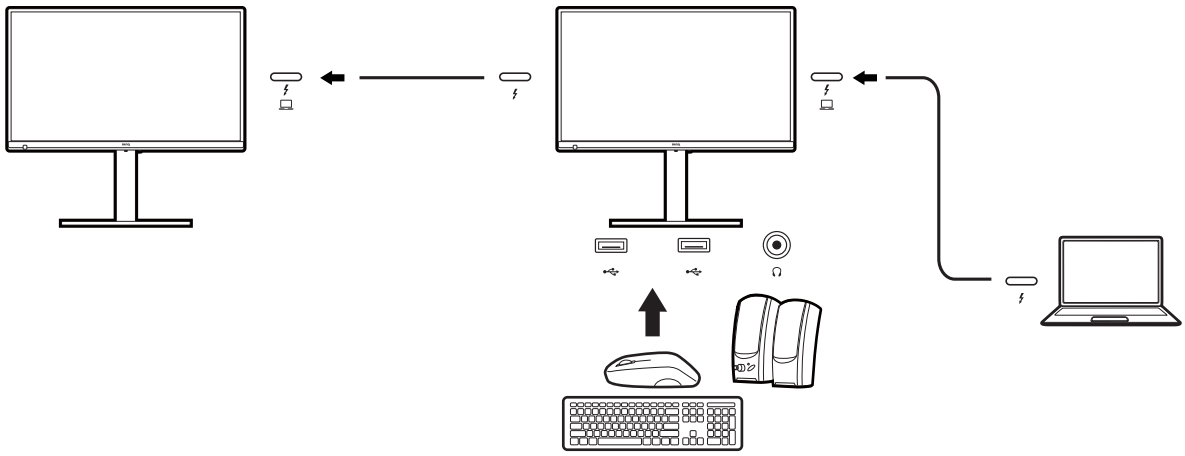

3. Power on the laptop and the monitors.
4. On your laptop, decide the way you want the content to be displayed on the connected monitors: **Duplicate**, **Extend**, or **Second screen only**. Additional software (purchased separately) may be used to manage the display. Refer to the manual of the purchased software for more information.

Supported resolution

To perform Thunderbolt daisy chaining, a limited number of connected monitors is required to ensure image quality. The following information shows the image resolution available to each monitor.

• MA270S

1st monitor	2nd monitor
5120 x 2880 (60Hz)	5120 x 2880 (60Hz)

• MA320UG

1st monitor	2nd monitor
3840 x 2160 (144Hz)	3840 x 2160 (144Hz)

The signal output from a laptop to your monitor is always 3840 x 2160 (MA320UG)/5120 x 2880 (MA270S). If multiple monitors are connected, you can adjust each monitor's resolution from the operating system of your laptop.

Please also be noted that the supported number of devices for connection may vary by graphic card. To find out the capability of your graphic card, check its specifications or contact its manufacturer.

Sharing a set of keyboard, mouse and other USB peripherals with KVM (MA270S/MA320UG only)

You can shift the control devices (i.e., keyboard and mouse) and other USB peripherals among multiple video sources through KVM.

Displaying one source at a time

1. Connect your video sources via Thunderbolt ( ) and USB-C™ ( ) ports.
2. Connect the control devices and other USB peripherals to the USB ports on the monitor.
3. After two sets of connections are made as instructed, the **KVM** function is enabled automatically. The display is switched to the available inputs while the keyboard and mouse control is switched as well.

Displaying two sources at the same time (**Smart KVM**)

When two input sources are displayed simultaneously and **Smart KVM** is enabled, you will be able to do the following easily between two computers:

• Move the cursor freely to switch USB control over two systems

• Copy and paste texts

• Copy and paste files

1. Connect your video sources via Thunderbolt ( ) and USB-C™ ( ) ports.
2. Make sure **Display Pilot 2** has been installed on both computers.
3. To ensure the cursor can be moved seamlessly between two computers, make sure both computers have the same screen resolution setting.
4. Connect the control devices and other USB peripherals to the USB ports on the monitor.
5. In **KVM** setting of **Display Pilot 2** on both computers, enable **Auto Switch** and **Smart KVM**. Install smart KVM driver and confirm to enable PBP when you are prompted to.

6. In **KVM** setting of **Display Pilot 2** on both computers, verify that each window matches its corresponding source location: left to left, right to right.
7. Wait until the **Smart KVM** status in **Display Pilot 2** on both computers shows connected. The **Smart KVM** function is ready for use.

Troubleshooting

Frequently asked questions (FAQ)

Imaging

The image is blurred.

- Download **Resolution** file from the website (see Product support on page 3). Refer to "**Adjusting the Screen Resolution**". And then select the correct resolution, refresh rate and make adjustments based on these instructions.
- If a VGA extension cable is used, remove the extension cable for the test. Is the image now in focus? Download **Resolution** file from the website (see Product support on page 3). Refer to "**Adjusting the Screen Resolution**". And then select the correct resolution, refresh rate and make adjustments based on these instructions to optimize the image. It is normal for blurring to occur due to conduction losses in extension cables. You can minimize these losses by using an extension cable with better conduction quality or with a built-in booster.

Does the blurring only occur at resolutions lower than the native (maximum) resolution?

Download **Resolution** file from the website (see Product support on page 3). Refer to "**Adjusting the Screen Resolution**". Select the native resolution.

Pixel errors can be seen.

One of several pixels is permanently black, one or more pixels are permanently white, one or more pixels are permanently red, green, blue or another color.

- Clean the LCD screen.
- Cycle power on-off.
- These are pixels that are permanently on or off and is a natural defect that occurs in LCD technology.

The image has a faulty coloration.

It has a yellow, blue or pink appearance.

Go to **Color** and **Reset Color**, and then choose **YES** to reset the color settings to the factory defaults.

If the image is still not correct and the OSD also has faulty coloration, this means one of the three primary colors is missing in the signal input. Now check the signal cable connectors. If any pin is bent or broken off, please contact your dealer to get necessary support.

The image is distorted, flashes or flickers.

Download **Resolution** file from the website (see Product support on page 3). Refer to "**Adjusting the Screen Resolution**". And then select the correct resolution, refresh rate and make adjustments based on these instructions.

You are running the monitor at its native resolution, but the image is still distorted.

Images from different input sources may appear distorted or stretched on the monitor running at its native resolution. To have the optimal display performance of each type of input sources, you can use the **Display Mode** function to set a proper aspect ratio for the input sources. See Display Mode on page 43 for details.

The image is displaced in one direction.

Download **Resolution** file from the website (see Product support on page 3). Refer to "**Adjusting the Screen Resolution**". And then select the correct resolution, refresh rate and make adjustments based on these instructions.

Faint shadow from the static image displayed is visible on the screen.

- Activate the power management function to let your computer and monitor go into a low power "sleep" mode when not actively in use.
- Use a screensaver to prevent the occurrence of image retention.

LED indicator

The power LED indicator is white or orange.

- If the LED lights up in solid white, the monitor is powered on.
- If the LED is illuminated in white and there is a message **Out of Range** on the screen, this means you are using a display mode that this monitor does not support, please change the setting to one of the supported mode. Download **Resolution** file from the website (see Product support on page 3). Refer to "**Adjusting the Screen Resolution**". And then select the correct resolution, refresh rate and make adjustments based on these instructions.
- If the LED is illuminated in orange, the power management mode is active. Press any button on the computer keyboard or move the mouse. If that does not help, check the signal cable connectors. If any pin is bent or broken off, please contact your dealer to get necessary support.
- If the LED is off, check the power supply mains socket, the external power supply and the mains switch.

OSD messages

A message **Out of Range** on the screen during computer boot up process.

If there is a message **Out of Range** on the screen during computer boot up process, this means computer compatibility caused by operating system or graphic card. The system will adjust the refresh rate automatically. Just wait until the operating system is launched.

Audio

No sound can be heard from the built-in speakers.

- Check whether the desired cable to input audio signals is properly connected. See Connect the headphone. on page 26 for details.
- Increase the volume (volume may be muted or too low).
- Remove your headphone and/or external speakers. (If they are connected to the monitor, the built-in speakers are automatically muted.)

Sound from the built-in speakers is low or unclear.

Increase the volume (volume may be too low).

No sound can be heard from the connected external speakers.

- Remove your headphone (if the headphone is connected to the monitor).
- Check whether the headphone jack is properly connected.
- If the external speakers are USB-powered, check whether the USB connection is OK.
- Increase the volume (volume may be muted or too low) on the external speakers.

(Selected models only) The built-in microphone does not respond when the monitor is connected to a PC.

- (Models with USB-C™) Check if the certified USB-C™ cable with signal transmission and power delivery functions is properly connected.
- Increase the MIC volume from the **Audio** menu. See Volume on page 37 for more information.

Sensors (selected models only)

The light sensor of the monitor does not work well.

The light sensor is located at the top of the monitor. Please check:

- If you have removed the sensor protection sticker.
- If the **Visual Optimizer** function is set to **ON**.
- If there are any obstacles at the top of the sensor that keep the sensor from detecting the light properly.
- If there are any objects or clothing in bright colors at the top of the sensor. Bright colors (especially white and fluorescent colors) reflect light and the sensor cannot detect the main light sources.

USB-C™ connection (models with USB-C™)

No video or audio output from the laptop with USB-C™ connection.

Check the cable connections and menu settings in the following order.

- Check if the USB-C™ cable has been connected to the monitor and the laptop properly. See Connect the PC video cable on page 26 for more information.
- Check if the input source has been selected to **USB-C** from **Input**.

Need more help?

If your problems remain after checking this manual, please contact your place of purchase or visit the local website from Support.BenQ.com for more support and local customer service.

tehnoteka

https://cenoteka.rs

Ovaj dokument je originalno proizveden i objavljen od strane proizvođača, brenda BenQ, i preuzet je sa njihove zvanične stranice. S obzirom na ovu činjenicu, Cenoteka ističe da ne preuzima odgovornost za tačnost, celovitost ili pouzdanost informacija, podataka, mišljenja, saveta ili izjava sadržanih u ovom dokumentu.

Napominjemo da Cenoteka nema ovlašćenje da izvrši bilo kakve izmene ili dopune na ovom dokumentu, stoga nismo odgovorni za eventualne greške, propuste ili netačnosti koje se mogu naći unutar njega. Cenoteka ne odgovara za štetu nanesenu korisnicima pri upotrebi netačnih podataka. Ukoliko imate dodatna pitanja o proizvodu, ljubazno vas molimo da kontaktirate direktno proizvođača kako biste dobili sve detaljne informacije.

Za najnovije informacije o ceni, dostupnim akcijama i tehničkim karakteristikama proizvoda koji se pominje u ovom dokumentu, molimo posetite našu stranicu klikom na sledeći link:

https://cenoteka.rs/p/benq-monitor-315-ips-4k-ma320up-nano-gloss-za-macbook/