tehnoteka

https://cenoteka.rs

Uputstvo za upotrebu (EN)

BENQ monitor 27'' IPS GW2791P



Cenoteka je online destinacija za upoređivanje cena i karakteristika bele tehnike, potrošačke elektronike i IT uređaja kod trgovinskih lanaca i internet prodavnica u Srbiji. Naša stranica vam omogućava da istražite najnovije informacije, detaljne karakteristike i konkurentne cene proizvoda.

Posetite nas i uživajte u ekskluzivnom iskustvu pametne kupovine klikom na link:

https://cenoteka.rs/p/benq-monitor-27-ips-gw2791p/

LCD Monitor

User Manual

Stylish Monitor with Eye Care Technology | G Series

Copyright

Copyright © 2026 by BenQ Corporation. All rights reserved. No part of this publication may be reproduced, transmitted, transcribed, stored in a retrieval system or translated into any language or computer language, in any form or by any means, electronic, mechanical, magnetic, optical, chemical, manual or otherwise, without the prior written permission of BenQ Corporation.

Disclaimer

BenQ Corporation makes no representations or warranties, either expressed or implied, with respect to the contents hereof and specifically disclaims any warranties, merchantability or fitness for any particular purpose. Further, BenQ Corporation reserves the right to revise this publication and to make changes from time to time in the contents hereof without obligation of BenQ Corporation to notify any person of such revision or changes.

BenQ flicker-free technology maintains a stable backlight with a DC dimmer that eliminates the primary cause of monitor flicker, making it easier on the eyes. The performance of flicker-free may be affected by external factors such as poor cable quality, unstable power supply, signal interference, or poor grounding, and not limited to the above mentioned external factors. (Applicable for flicker-free models only.)

Product support

This document aims to provide the most updated and accurate information to customers, and thus all contents may be modified from time to time without prior notice. Please visit the website for the latest version of this document and other product information. Available files vary by model.

1. Make sure your computer is connected to the Internet.
2. Visit the local website from Support.BenQ.com. The website layout and content may vary by region/country.
   - User manual and related document
   - Drivers and applications
   - (EU only) Dismantled information: Available on the user manual download page. This document is provided based on Regulation (EU) 2019/2021 to repair or recycle your product. Always contact the local customer service for servicing within the warranty period. If you wish to repair an out-of-warranty product, you are recommended to go to a qualified service personnel and obtain repair parts from BenQ to ensure compatibility. Do not disassemble the product unless you are aware of the consequences. If you cannot find the dismantled information on your product, contact the local customer service for assistance.

Advanced software

Apart from the built-in technologies and features available on this product, you are provided with more software applications to enhance and extend the product functionality.

Download the software and its user guide as instructed from the BenQ website.

- **Eye-CareU**

Eye-CareU is a software utility that helps adjust your Eye-Care related settings quickly as an alternative of the control keys on the monitor. It also helps keep you from eye strain by managing your screen time and reminding you of proper light.

EPREL Registration Number:

GW2490P: 2703372	GW2491PE: 2723246	GW2791P: 2723248
GW2490PE: 2703554	GW2790P: 2699506	GW2791PE: 2723249
GW2491P: 2723245	GW2790PE: 2699575	

Q&A index

Start with the topics that you are interested in.

Setup

How to set up the monitor and turn it on?

Safety precautions 5
How to assemble your monitor hardware 16

How to adjust the monitor viewing angle?

Adjust the viewing angle. 17

How to wall mount the monitor?

Mounting the monitor 20

Functions to reduce eye strain

How to reduce the blue light emitted from the display?

Low Blue Light 23

How to set the appropriate screen brightness?

Adjusting screen brightness and color temperature automatically (Visual Optimizer)(GW90P only) 26

Menus and accessories

How to use the OSD menu?

Basic menu operations 22
Navigating the Menu 23

Maintenance and product support

How to clean the monitor?

Care and cleaning 8

How to keep the monitor not in use for a long time?

How to detach the stand and the base 19
Care and cleaning 8

I need more support.

Product support 3
Servicing 8

Safety precautions

Power safety

Please follow these safety instructions for best performance, and long life for your monitor.

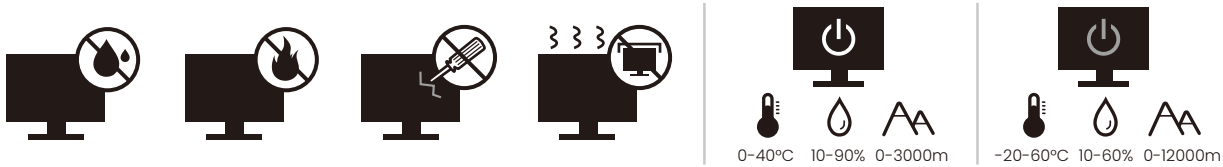

- The AC plug isolates this equipment from the AC supply.
- The power supply cord serves as a power disconnect device for pluggable equipment. The socket outlet should be installed near the equipment and be easily accessible.
- This product should be operated from the type of power indicated on the marked label. If you are not sure of the type of power available, consult your dealer or local power company.
- The Class I pluggable equipment Type A must be connected to protective earth.
- An approved power cord greater or equal to H03VV-F or H05VV-F, 2G or 3G, 0.75mm^2 must be used.
- Use only the power cord provided by BenQ. Never use a power cord that appears to be damaged or frayed.
- To avoid possible damage to the monitor, do not use it in a region where power supply is unstable.
- Ensure that the power cord is connected to a grounded power outlet before turning on the monitor.
- To avoid possible danger, observe the total electric load when using the monitor with a (multi-outlet) extension cord.
- Always turn off the monitor before unplugging the power cord.

For Germany only:

- (If the weight of the product is less than or equal to 3 kg) An approved power cord greater or equal to H03VV-F, 3G, 0.75mm^2 must be used.
- (If the weight of the product is more than 3 kg) An approved power cord greater or equal to H05VV-F or H05RR-F, 3G, 0.75mm^2 must be used.
- (If a remote control is provided) RISK OF EXPLOSION IF BATTERY IS REPLACED BY AN INCORRECT TYPE. DISPOSE OF USED BATTERIES ACCORDING TO THE INSTRUCTIONS.

For models with adapter:

- Use only the power adapter supplied with your LCD Monitor. Use of another type of power adapter will result in malfunction and/or danger.
- Allow adequate ventilation around the adapter when using it to operate the device or charge the battery. Do not cover the power adapter with paper or other objects that will reduce cooling. Do not use the power adapter while it is inside a carrying case.
- Connect the power adapter to a proper power source.
- Do not attempt to service the power adapter. There are no service parts inside. Replace the unit if it is damaged or exposed to excess moisture.

Installation

- Do not use your monitor under any of the following environmental conditions:
  - Extremely high or low temperature, or in direct sunlight
  - Dusty places
  - Highly humid, exposed to rain, or close to water
  - Exposed to vibrations or impacts in places such as cars, buses, trains, and other rail vehicles
  - Near heating appliances such as radiators, heaters, fuel stoves, and other heat-generating items (including audio amplifiers)
  - An enclosed place (such as a closet or bookcase) without appropriate ventilation
  - An uneven or sloping surface
  - Exposed to chemical substances or smoke
- Carry the monitor carefully.
- Do not place heavy loads on the monitor to avoid possible personal injury or damage to the monitor.
- Ensure that children do not hang or climb onto the monitor.
- Keep all packing bags out of reach of children.

Operation

- To protect your eyesight, please refer to the user manual to set the optimal screen resolution and the viewing distance.
- To reduce eye fatigue, take a break on a regular basis while using the monitor.
- Avoid taking either one of the following actions for a long time. Otherwise, burn marks may occur.
  - Play images that cannot occupy the screen entirely.
  - Place a still image on the screen.
- To avoid possible damage to the monitor, do not touch the monitor panel by finger tip, pen, or any other sharp objects.
- Excessively frequent plug and unplug of video connectors may cause damage to the monitor.
- This monitor is designed mainly for personal use. If you want to use the monitor in a public place or a harsh environment, contact your nearest BenQ service center for assistance.
- To avoid possible electric shock, do not dissemble or repair the monitor.
- If a bad smell or an abnormal sound appears to come from the monitor, contact your nearest BenQ service center for assistance immediately.

Caution

- The distance between you and the monitor should be 2.5 to 3 times the diagonal width of the screen.
- Looking at the screen for an extended period of time causes eye fatigue and may deteriorate your eyesight. Rest your eyes for 5 ~ 10 minutes for every 1 hour of product use.
- Reduce your eye strain by focusing on objects far way.
- Frequent blinking and eye exercise help keep your eyes from drying out.

Safety notice for remote control (applicable if a remote control is provided)

- Do not put the remote control in the direct heat, humidity, and avoid fire.
- Do not drop the remote control.
- Do not expose the remote control to water or moisture. Failure to do so could result in malfunction.
- Confirm there is no object between the remote control and the remote sensor of the product.
- When the remote control will not be used for an extended period, remove the batteries.

Battery safety notice (applicable if a remote control is provided)

The use of the wrong type of batteries may cause chemical leaks or explosion. Please note the following:

- Always ensure that the batteries are inserted with the positive and negative terminals in the correct direction as shown in the battery compartment.
- Different types of batteries have different characteristics. Do not mix different types.
- Do not mix old and new batteries. Mixing old and new batteries will shorten battery life or cause chemical leaks from the old batteries.
- When batteries fail to function, replace them immediately.
- Chemicals which leak from batteries may cause skin irritation. If any chemical matter seeps out of the batteries, wipe it up immediately using a dry cloth, and replace the batteries as soon as possible.
- Due to varying storage conditions, the battery life for the batteries included with your product may be shortened. Replace them within 3 months or as soon as you can after initial use.
- There may be local restrictions on the disposal or recycling of batteries. Consult your local regulations or waste disposal provider.

If the supplied remote control contains a coin / button cell battery, pay attention to the following notice as well.

- Do not ingest battery. Chemical Burn Hazard.
- The remote control supplied with this product contains a coin / button cell battery. If the coin / button cell battery is swallowed, it can cause severe internal burns in just 2 hours and can lead to death.
- Keep new and used batteries away from children. If the battery compartment does not close securely, stop using the product and keep it away from children.
- If you think batteries might have been swallowed or placed inside any part of the body, seek immediate medical attention.

Care and cleaning

- Do not place the monitor face down on the floor or a desk surface directly. Otherwise, scratches on the panel surface may occur.
- The equipment is to be secured to the building structure before operation.
- (For models that support wall or ceiling mounting)
  - Install your monitor and monitor mounting kit on a wall with flat surface.
  - Ensure that the wall material and the standard wall mount bracket (purchased separately) are stable enough to support the weight of the monitor.
  - Turn off the monitor and the power before disconnecting the cables from the LCD monitor.
- Always unplug the product from the power outlet before cleaning. Clean the LCD monitor surface with a lint-free, non-abrasive cloth. Avoid using any liquid, aerosol or glass cleaners.
- Slots and openings on the back or top of the cabinet are for ventilation. They must not be blocked or covered. Your monitor should never be placed near or over a radiator or heat sources, or in a built-in installation unless proper ventilation is provided.
- Do not place heavy loads on the monitor to avoid possible personal injury or damage to the monitor.
- Consider keeping the box and packaging in storage for use in the future when you may need to transport the monitor.
- Refer to the product label for information on power rating, manufacture date, and identification markings.

Servicing

- Do not attempt to service this product yourself, as opening or removing covers may expose you to dangerous voltages or other risks. If any of the above mentioned misuse or other accident such as dropping or mishandling occurs, contact qualified service personnel for servicing.
- For replacement of power cord, connection cables, remote control or power adapter, please contact BenQ customer service.
- Contact your place of purchase or visit the local website from Support.BenQ.com for more support.

Support.BenQ.com

General warranty information

Note that the monitor warranty may be void if any of the following conditions occurs:

- Documents required for warranty services have been altered by unauthorized use or is illegible.
- The model number or production number on the product has been altered, deleted, removed or made illegible.
- Repairs, modifications, or alterations have been made by unauthorized service organizations or persons.
- Damage caused by improper storage of the monitor (including but not limited to force majeure, direct exposure to sunlight, water, or fire).
- Reception problems occurred due to external signals (such as antenna, Cable TV) outside the monitor.

- Defects caused by abuse or misuse of the monitor.
- Before using the monitor, it is the sole responsibility of the user to check whether the monitor is compatible with local technical standards if the user brings the monitor out of its intended sales area. Failure to do so may cause product breakdown and the user will have the pay the repairing costs.
- It is the sole responsibility of the user if problems (such as data loss and system failure) occurred due to non-factory provided software, parts, and/or non-original accessories.
- Please use the original accessories (e.g. power cable) only with the device to avoid possible dangers such as electric shock and fire.

Typographics

Icon / Symbol	Item	Meaning
	Warning	Information mainly to prevent the damage to components, data, or personal injury caused by misuse and improper operation or behavior.
	Tip	Useful information for completing a task.
	Note	Supplementary information.

In this document, the steps needed to reach a menu may be shown in condensed form, for example: **Menu** > **System** > **Information**.

Table of Contents

Copyright 2

Product support 3

Advanced software 3

Q&A index 4

Safety precautions 5

Power safety 5

Installation 6

Operation 6

Safety notice for remote control (applicable if a remote control is provided) 7

Battery safety notice (applicable if a remote control is provided) 7

Care and cleaning 8

Servicing 8

General warranty information 8

Getting started 11

Getting to know your monitor 13

Front view 13

Back view 13

Connections 15

How to assemble your monitor hardware 16

How to detach the stand and the base 19

Mounting the monitor 20

How to adjust your monitor 21

The control key 21

Basic menu operations 22

Navigating the **Menu** 23

Choosing an appropriate picture mode (color mode) 25

Available menu options to each **Color Mode** 25

Adjusting screen brightness and color temperature automatically (**Visual Optimizer**)(GW90P only) 26

Enabling color vision accessibility (**Color Weakness**)(GW90P only) 26

Resetting the settings 27

Adjusting **Setting** 27

Troubleshooting 30

Frequently asked questions (FAQ) 30

Need more help? 32

2026/05/27
G90P-EM-V0

Getting started

When unpacking please check you have the following items. If any are missing or damaged, please contact the place of purchase for a replacement.

BenQ LCD Monitor	GW90P (models with light sensor) 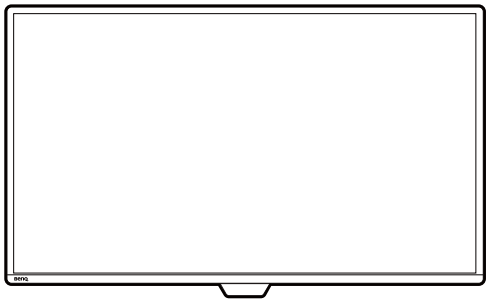 GW91P (models without light sensor) 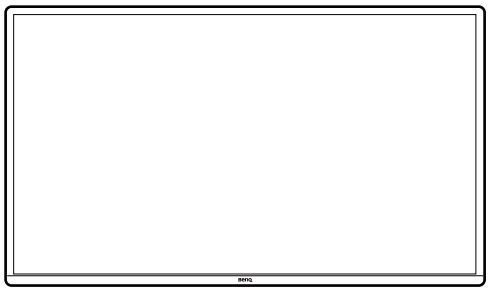
Monitor Stand	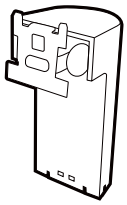
Monitor Base	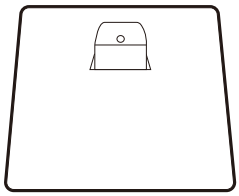
User documents: • Quick Start Guide • Safety Instructions • Regulatory Statements	
Power Cord (Supplied item may differ by model or region.)	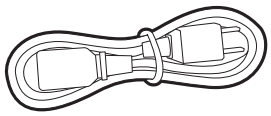
Video Cable: HDMI	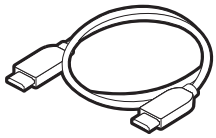

- Available accessories and the pictures shown here may differ from the actual contents and the product supplied for your region. And the package contents may subject to change without prior notice. For cables that are not supplied with your product, you can purchase them separately.
- Consider keeping the box and packaging in storage for use in the future when you may need to transport the monitor. The fitted foam packing is ideal for protecting the monitor during transport.
- Accessories and cables may be included or sold separately depending on the product supplied for your region.

Always keep the product and accessories out of reach of small children.

Getting to know your monitor

Front view

GW90P/GW90PE

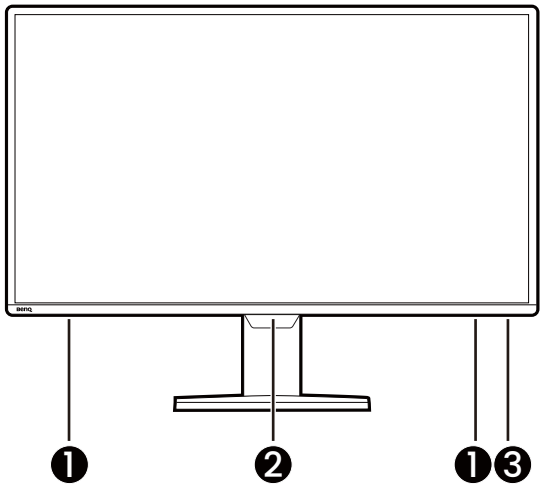

GW91P/GW91PE

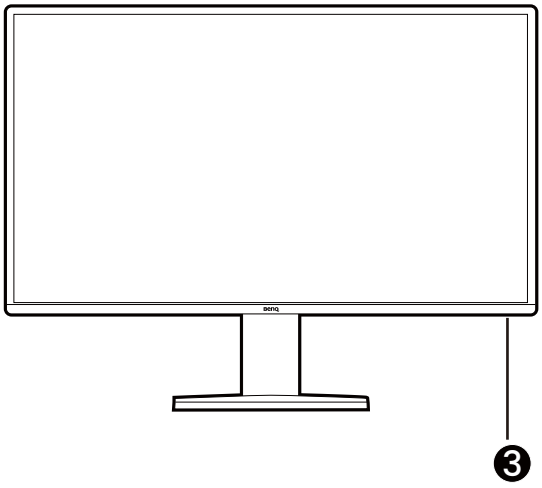

1. Speakers
2. Light sensor
3. Power LED indicator

Back view

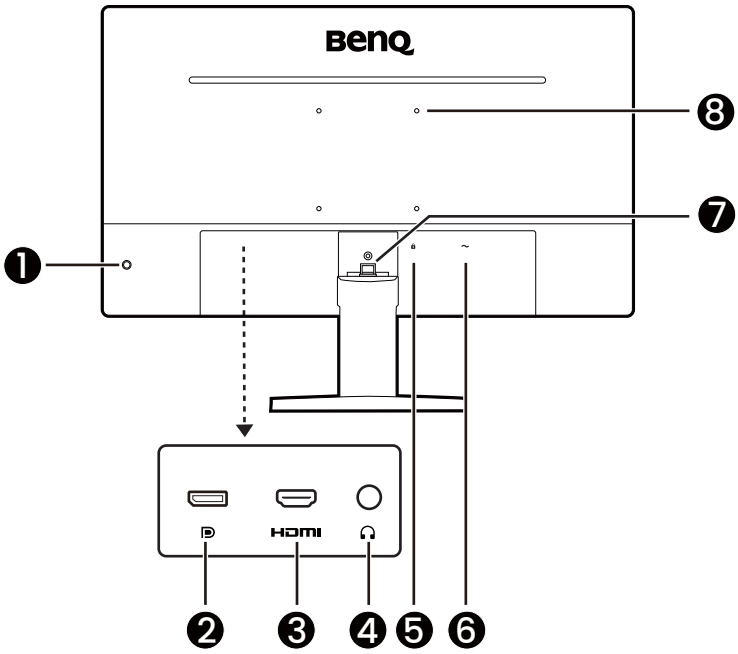

1. Power button / 5-way controller
2. DisplayPort socket
3. HDMI socket
4. Headphone jack
5. Kensington lock slot
6. Quick release
7. AC power input jack
8. VESA mount

- Above diagram may vary depending on the model.
- Picture may differ from product supplied for your region.
- (Applicable for products with white case) The case of the product may turn yellow in about 3 years due to the photo-oxidation reactions induced by light. This is a normal phenomenon and should not be considered as manufacturing defect.

Connections

The following connection illustrations are for your reference only. For cables that are not supplied with your product, you can purchase them separately.

For detailed connection methods, see page 19.

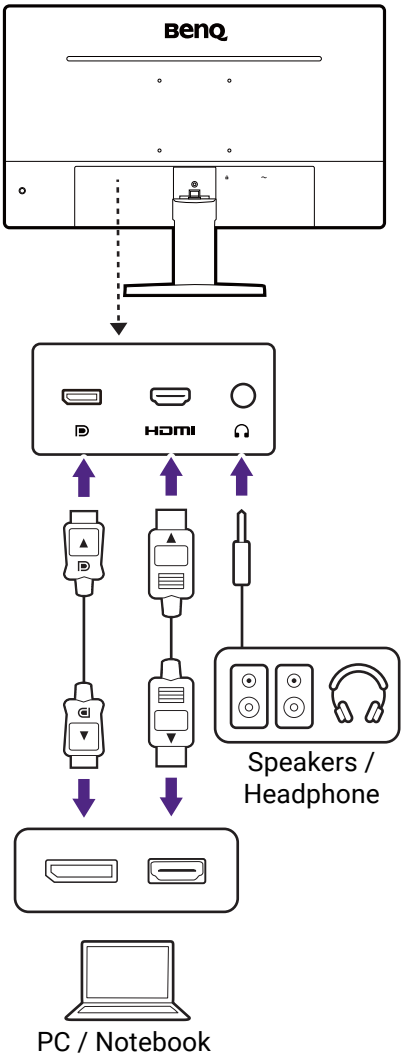

How to assemble your monitor hardware

- If the computer is turned on you must turn it off before continuing.
- Do not plug-in or turn-on the power to the monitor until instructed to do so.
- The illustrations in this document are for your reference only and may look different from the appearance of the product.
- The following illustrations are for your reference only. The location and available input and output jacks may vary depending on the purchased model.
- Avoid finger pressure on the screen surface.
- The latch on the monitor stand/base of the same model may vary by design, yet the installation, function, and product appearance are not affected in general. Be sure to assemble the monitor with the stand/base in the same package.

1. Attach the monitor stand and base.

Please be careful to prevent damage to the monitor. Placing the screen surface on an object like a stapler or a mouse will crack the glass or damage the LCD substrate voiding your warranty. Sliding or scraping the monitor around on your desk will scratch or damage the monitor surround and controls.

Protect the monitor and screen by clearing a flat open area on your desk and placing a soft item like the monitor packaging bag on the desk for padding.

Gently lay the screen face down on a flat clean padded surface.

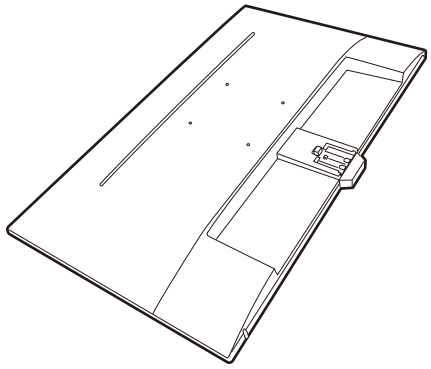

Attach the monitor stand to the monitor base as illustrated until it locks in place.

Pay attention to the sharp parts during assembly.

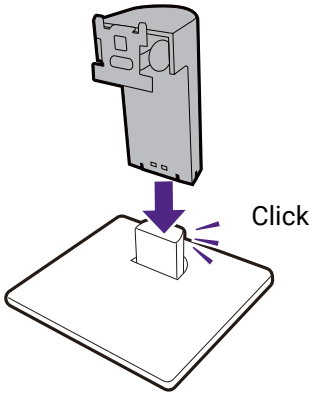

Orient and align the stand arm with the monitor, then push them together until they click and lock into place.

Carefully lift the monitor, turn it over and place it upright on its stand on a flat even surface.

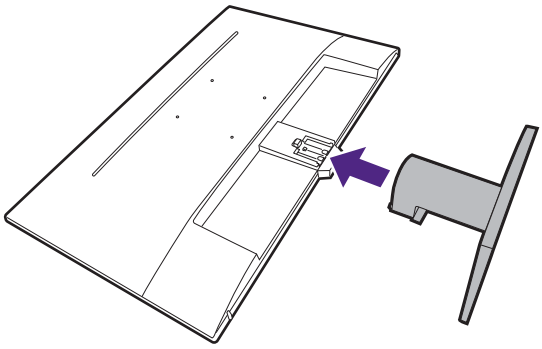

2. Connect the PC video cable

The video cables included in your package and the socket illustrations on the right may vary depending on the product supplied for your region.

Establish a video cable connection. Connect the monitor to your video source(s) via HDMI/DP cable(s) as illustrated.

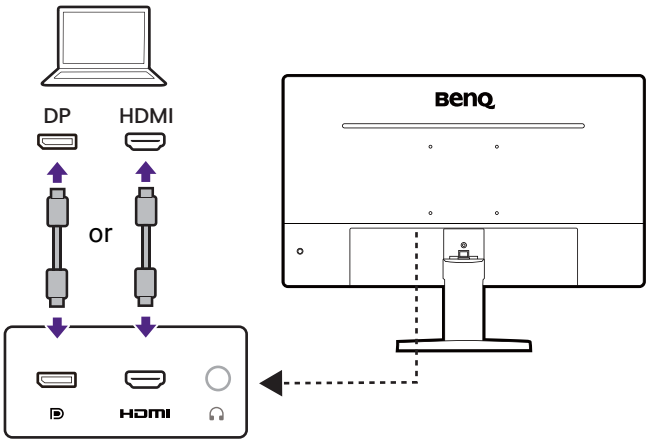

3. Connect the headphone.

You may connect headphones to the headphone jack found below the rear of the monitor.

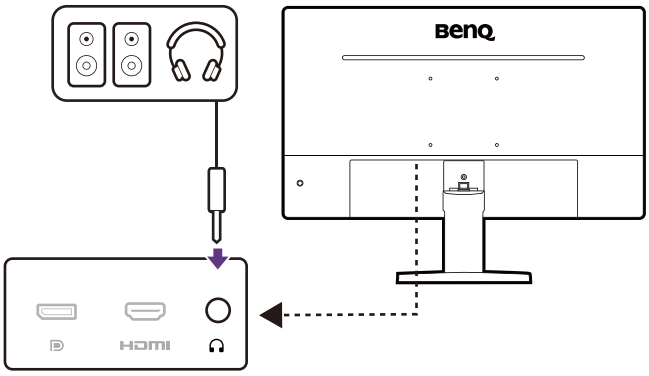

4. Adjust the viewing angle.

You may position the screen to the desired angle with monitor tilt function. Check the product specifications on the website for details.

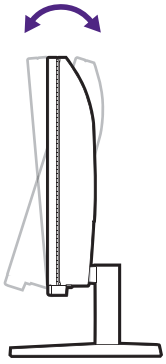

Your monitor is an edge-to-edge monitor and should be handled with care. Avoid finger pressure on the screen surface. Excessive force on the display is prohibited.

5. Connect the power.

Plug one end of the power cord into the socket labelled ~ on the rear of the monitor.

Picture may differ from product supplied for your region.

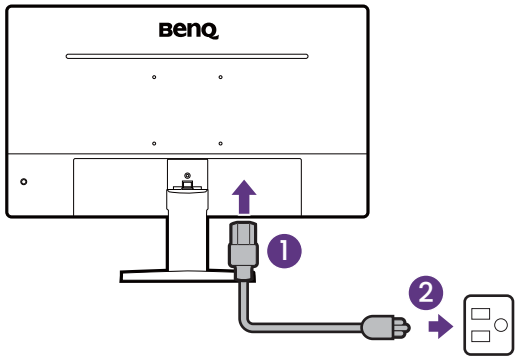

6. Turn-on the power.

Turn on the monitor by pressing the power button on the monitor.

Turn on the computer too. If you have multiple video sources, press the 5-way controller to bring up the input selection menu. Select one input to display.

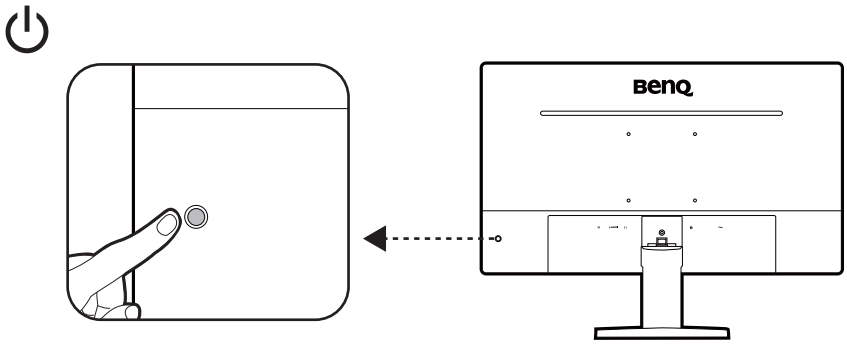

To extend the service life of the product, we recommend that you use your computer's power management function.

7. Set the monitor ready for use.

Select a display language after the monitor is powered on, and select **CONFIRM** to proceed. The monitor is ready for use now.

How to detach the stand and the base

1. Power off the monitor.

Turn off the monitor and the power before unplugging the power cable. Turn off the computer before unplugging the monitor signal cable.

2. Prepare the monitor and area.

Lay the screen face down on a clean and well-padded surface. Or put the monitor back to the box that used to ship the product in the first place.

Please be careful to prevent damage to the monitor. Placing the screen surface on an object like a stapler or a mouse will crack the glass or damage the LCD substrate voiding your warranty. Sliding or scraping the monitor around on your desk will scratch or damage the monitor surround and controls.

3. Remove the monitor stand.

While pressing and holding the stand release button (1), detach the stand slowly from the monitor (2).

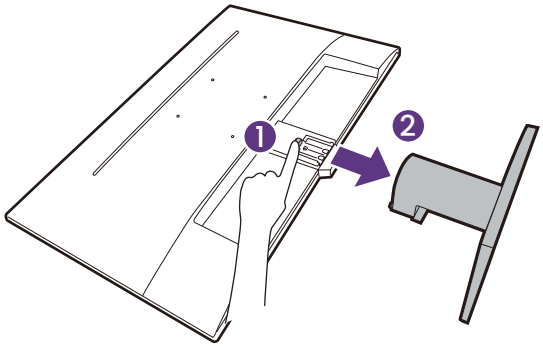

4. Remove the monitor base.

Hold the monitor stand arm with one hand, and push the locking clips to detach the monitor base from the stand arm.

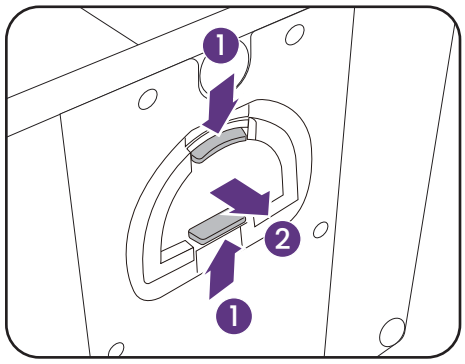

Mounting the monitor

The back of your LCD monitor has a VESA standard mount with 100mm pattern, allowing the installation of a wall mount bracket or a monitor arm. Before starting to install a monitor wall mounting kit, please read the precautions carefully.

You can visit BenQ website for available monitor arms.

Precautions:

- Install your monitor and monitor mounting kit on a wall/desk with flat surface.
- Ensure that the wall/tabletop material and the standard wall/desk mount bracket (purchased separately) are stable enough to support the weight of the monitor. Refer to the product specifications on the website for weight information.
- Turn off the monitor and the power before disconnecting the cables from the LCD monitor.

1. Remove the monitor stand.

Lay the screen face down on a clean and well-padded surface. Detach the monitor stand as instructed in How to detach the stand and the base on page 19.

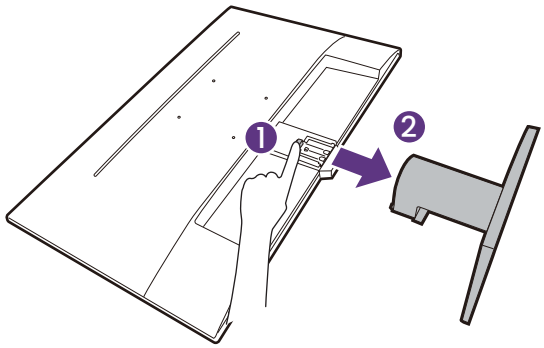

Then pull the monitor stand backward away from the monitor.

2. Follow the instruction manuals of the wall/desk mount bracket you purchased to complete the installation.

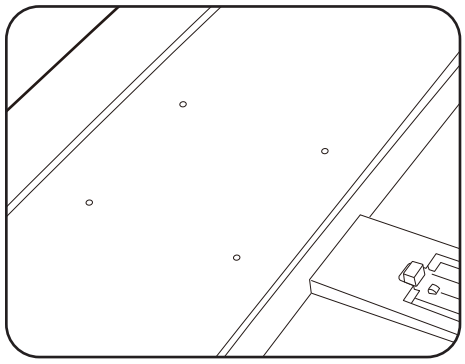

Use four M4 x 10 mm screws to fix a VESA standard wall mount bracket to the monitor. Make sure that all screws are tightened and secured properly. Consult a professional technician or BenQ service for wall mount installation and safety precautions.

How to adjust your monitor

The illustrations and the images shown in this document are for your reference. The actual content may vary by the product supplied for you.

The control key

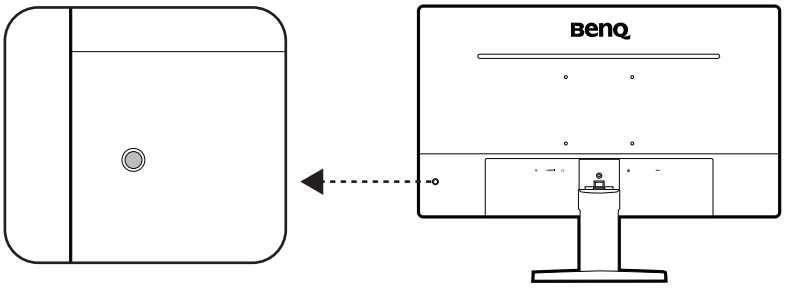

The functions of the control key are as following:

- Turns the power on or off. To power off the monitor, press and hold the key for 3 seconds.
- Accesses the functions or menu items as instructed by the on-screen icons. See Basic menu operations on page 22 for more information.

Basic menu operations

The 5-way controller is located below the lower part of the front bezel. While sitting in front of the monitor, move the controller to the directions instructed by the on-screen icons for menu navigation and operations.

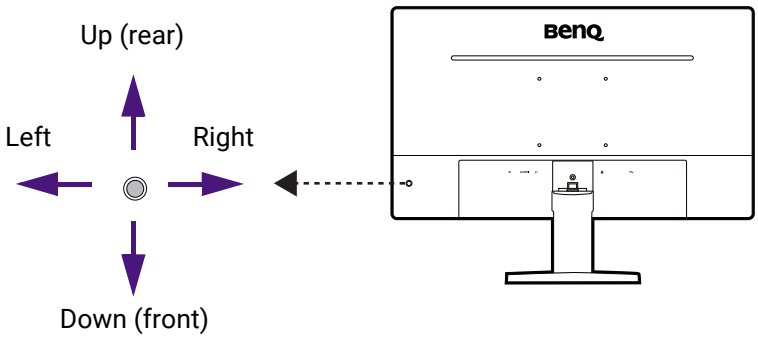

5-way controller operation	Function
(When no menu has been activated)	
Press the 5-way controller	Activates the menu.
(When a menu has been activated)	
Press	• Confirms the selection. • Exits the menu.
Move to the right	• Goes to the next menu. • For increase adjustment.
Move up	Goes to the previous menu item.
Move down	Goes to the next menu item.
Move to the left	• Returns to the previous menu. • For decrease adjustment.

You can use the OSD menu to adjust all the settings on your monitor. Available menu options may vary depending on the input sources, functions and settings.

1. Press the 5-way controller.
2. The **Menu** is displayed.
3. On the menu, make adjustments or selection. See Adjusting Setting on page 27 for details on the menu options.

OSD = On Screen Display.
The hot keys only operate while the main menu is not currently displaying. Hot key displays will disappear after a few seconds of no key activity.

Navigating the **Menu**

You can use the OSD menu to adjust all the settings on your monitor. See Basic menu operations on page 22 for details.

Available menu options may vary depending on the input sources, functions and settings. Menu options that are not available will become grayed out.

GW90P

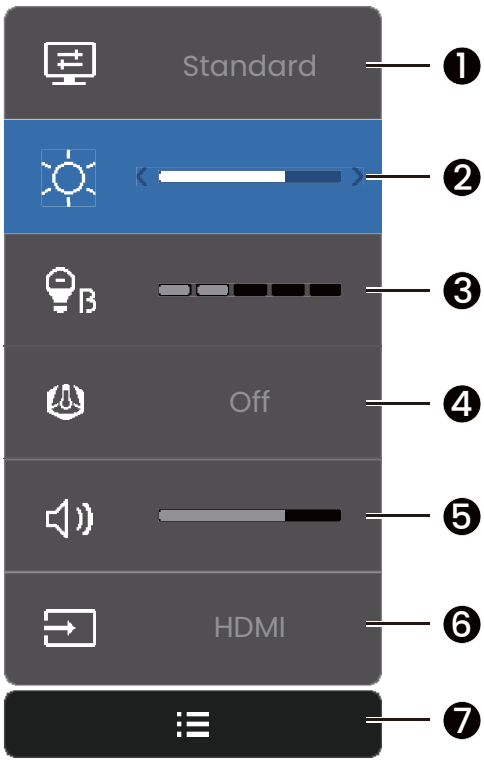

GW91P

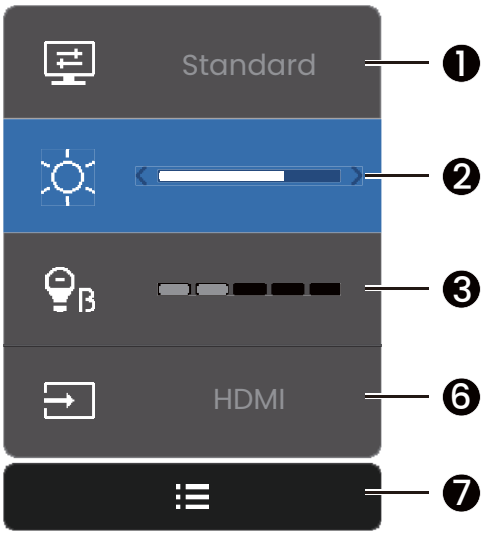

No.	Item	Description	Range
1	**Color Mode**	Press left/right to cycle through the available color mode. See Choosing an appropriate picture mode (color mode) on page 25 for more information.	• **Standard** • **Cinema** • **Game** • **ePaper** • **Care Mode**
2	**Brightness**	Adjusts the balance between light and dark shades.	0 ~ 100
3	**Low Blue Light**	Decreases the blue light emitted from the display to reduce the risk of blue light exposure to your eyes.	0 ~ 5
4	**Visual Optimizer**	Adjusts screen brightness according to the ambient brightness.	• **ON** • **OFF**
5	Speaker volume	Adjusts the audio volume.	0 ~ 100
6	**Input**	Detects the input sources connected and to choose from.	• **HDMI** • **DP**

No.	Item	Description	Range
7	**Setting**	Brings up the **Setting** menu. See Adjusting Setting on page 27 for more information.	• **Visual Optimizer** (GW90P only) • **Color Weakness** (GW90P only) • **Eye-CareU** • **System** • **Reset All**

Choosing an appropriate picture mode (color mode)

Your monitor provides various picture modes that are suitable for different types of images.

1. Press the 5-way controller to bring up **Menu**.
2. Under **Color Mode**, select a desired picture mode.

Item	Description	AMA value
Standard	For basic PC application.	**High** (8 ms)
Cinema	For viewing videos.	**High** (8 ms)
Game	For playing video games.	**High** (8 ms)
ePaper	For reading e-books or documents in black and white with suitable on-screen brightness and clear texts.	**OFF** (14 ms)
Care Mode	For online learning with low contrast and high saturation.	**OFF** (14 ms)

Available menu options to each **Color Mode**

Depending on the **Color Mode** you just set, the available options for each color adjustment may vary. The list is for reference only as available options also vary by input. Menu options that are not available will become grayed out.

GW90P

Color Mode Options	Brightness	Low Blue Light	Visual Optimizer	Color Weakness
Standard	V	V	V	V
Cinema	V	V	V	V
Game	V	V	V	V
ePaper	V	V	V	X
Care Mode	V	V	V	V

GW91P

Color Mode Options	Brightness	Low Blue Light
Standard	V	V
Cinema	V	V
Game	V	V
ePaper	V	V
Care Mode	V	V



- V: Available.
- X: Not available.

Adjustable OSD settings

While some settings (e.g., OSD language) are changed and take effect immediately regardless of other monitor settings or input, most OSD settings can be adjusted and saved to go with color modes. As a color mode is selected, the desired settings are applied.

Item	Description
Visual Optimizer (GW90P only)	Saved and applied by color mode switch.
Low Blue Light	
Color Weakness (GW90P only)	
Brightness / **Brightness** (V. O. on)	
Speaker volume (GW90P only)	Saved and applied for all color modes.
System	

Adjusting screen brightness and color temperature automatically (**Visual Optimizer**)(GW90P only)

The **Visual Optimizer** function works independently by picture modes (color modes).

The built-in light sensor works with Visual Optimizer technology to detect the ambient light, image brightness and contrast, and then balance the screen automatically. It helps keep image details as well as to reduce eye strain.

Press the 5-way controller to bring up **Menu** and enable/disable **Visual Optimizer** quickly.

- Once enabled, the **Auto Brightness** function is enabled as well.
- Once disabled, the **Auto Brightness** and **Auto Color Temp.** are disabled. You can only enable **Auto Color Temp.** from **Menu** > (**Setting**) > **Visual Optimizer**.

- The performance of **Visual Optimizer** may be impacted by the light sources and the monitor tilt angle. If you prefer to manually adjust the brightness again as desired, go to **Menu** and adjust brightness.
- The monitor also works with the eye-care software named **Eye-CareU**, which helps control the eye-care related settings and keep you from eye strain by managing the screen time. Access the software and its user manual from Support.BenQ.com.

Enabling color vision accessibility (**Color Weakness**)(GW90P only)

Color Weakness is accessibility that helps people with color vision deficiency to distinguish colors. You are provided with **Red Filter** and **Green Filter** on this monitor. Choose one as needed.

1. Press the 5-way controller to bring up **Menu**.
2. Go to (**Setting**) > **Color Weakness**.
3. Move the slider to **Red** or **Green**.
4. Adjust the value of the filter. The value increases as the slider moves to the far end. A stronger effect is produced as the value increases.

Resetting the settings

To reset all settings to the factory default values, go to (**Setting**) > **Reset All**.
Follow the on-screen instructions to reset and start with the language setting.

Adjusting **Setting**

There is a variety of advanced system settings allow you to customize your display experience. Go to (**Setting**) for advanced system settings.
Available menu options may vary depending on the input sources, functions and settings. Menu options that are not available will become grayed out.

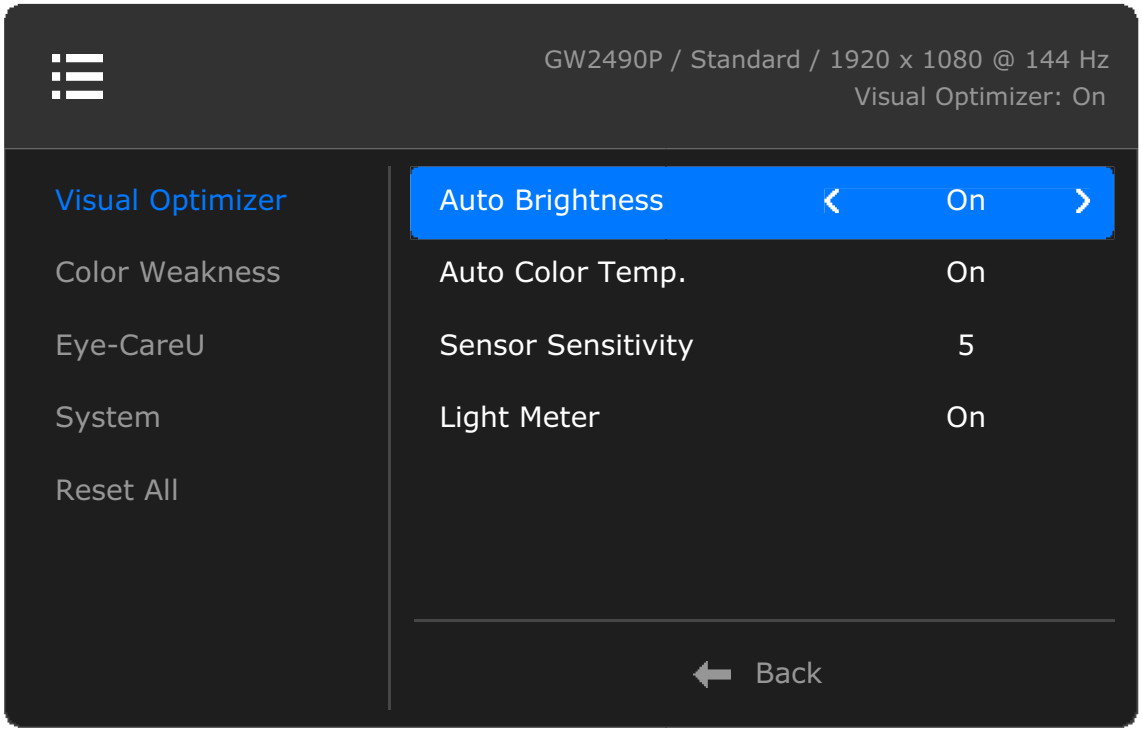

Item	Function		Range
Visual Optimizer (GW90P only)	Works with the light sensor to detect the ambient light, image brightness and contrast, and then balance the screen automatically. It helps keep image details as well as to reduce eye strain.		
	Auto Brightness	The screen brightness changes with the ambient brightness.	• **ON** • **OFF**
	Auto Color Temp.	The screen color temperature changes with the ambient coloring. Available only if **Auto Brightness** is enabled.	• **ON** • **OFF**
	Sensor Sensitivity	Adjusts sensitivity of light sensor to change the brightness range to be detected. This may be helpful to correct uneven lighting in light detection. Available only if **Auto Brightness** is enabled.	1 ~ 5
	Light Meter	Sets to display the light condition the monitor on the screen. Available only if **Auto Brightness** is enabled.	• **ON** • **OFF**
Color Weakness (GW90P only)	Adjusts color matching representation for people with color vision deficiency to distinguish colors easily. See Enabling color vision accessibility (Color Weakness)(GW90P only) on page 26 for details.		• **Red** • **Green**
Eye-CareU	Displays the download QR code of the **Eye-CareU** software. Scan for quick access to the software introduction page. The software should be installed on your computer to work with the monitor.		
System	For advanced system settings.		
	AMA	Improves the gray level response time of the LCD panel.	• **OFF** • **High** • **Premium**
	Input Auto Scan	Sets to automatically detect the available input source.	• **ON** • **OFF**
	MPRT	The Moving Picture Response Time (MPRT) technology helps reduce motion blur. Once enabled, the monitor turns the backlight off temporarily in fast-paced content when the color mode is **Game**.	• **ON** • **OFF**
	RGB PC Range	Determines the range of color scales. Select an option that matches the RGB range setting on the connected HDMI device.	• **Auto** • **RGB (0~255)** • **RGB (16~235)**

Item	Function	Range
Reset All	Resets all mode, color and geometry settings to the factory default values.	• **YES** • **NO**

Troubleshooting

Frequently asked questions (FAQ)

Imaging

The image is blurred.

- Download **Resolution** file from the website (see Product support on page 3). Refer to "**Adjusting the Screen Resolution**". And then select the correct resolution, refresh rate and make adjustments based on these instructions.
- If a VGA extension cable is used, remove the extension cable for the test. Is the image now in focus? Download **Resolution** file from the website (see Product support on page 3). Refer to "**Adjusting the Screen Resolution**". And then select the correct resolution, refresh rate and make adjustments based on these instructions to optimize the image. It is normal for blurring to occur due to conduction losses in extension cables. You can minimize these losses by using an extension cable with better conduction quality or with a built-in booster.

Does the blurring only occur at resolutions lower than the native (maximum) resolution?

Download **Resolution** file from the website (see Product support on page 3). Refer to "**Adjusting the Screen Resolution**". Select the native resolution.

Pixel errors can be seen.

One of several pixels is permanently black, one or more pixels are permanently white, one or more pixels are permanently red, green, blue or another color.

- Clean the LCD screen.
- Cycle power on-off.
- These are pixels that are permanently on or off and is a natural defect that occurs in LCD technology.

The image has a faulty coloration.

It has a yellow, blue or pink appearance.

Go to (**Setting**) > **Reset All**, and then choose **YES** to reset the color settings to the factory defaults.

If the image is still not correct and the OSD also has faulty coloration, this means one of the three primary colors is missing in the signal input. Now check the signal cable connectors. If any pin is bent or broken off, please contact your dealer to get necessary support.

The image is distorted, flashes or flickers.

Download **Resolution** file from the website (see Product support on page 3). Refer to "**Adjusting the Screen Resolution**". And then select the correct resolution, refresh rate and make adjustments based on these instructions.

The image is displaced in one direction.

Download **Resolution** file from the website (see Product support on page 3). Refer to "**Adjusting the Screen Resolution**". And then select the correct resolution, refresh rate and make adjustments based on these instructions.

Faint shadow from the static image displayed is visible on the screen.

- Activate the power management function to let your computer and monitor go into a low power "sleep" mode when not actively in use.
- Use a screensaver to prevent the occurrence of image retention.

Power LED indicator

The LED indicator is white or orange.

- If the LED lights up in solid white, the monitor is powered on.
- If the LED is illuminated in white and there is a message **Out of Range** on the screen, this means you are using a display mode that this monitor does not support, please change the setting to one of the supported mode. Download **Resolution** file from the website (see Product support on page 3). Refer to "**Adjusting the Screen Resolution**". And then select the correct resolution, refresh rate and make adjustments based on these instructions.
- If the LED is illuminated in orange, the power management mode is active. Press any button on the computer keyboard or move the mouse. If that does not help, check the signal cable connectors. If any pin is bent or broken off, please contact your dealer to get necessary support.
- If the LED is off, check the power supply mains socket, the external power supply and the mains switch.

OSD controls

How to change the OSD language?

The OSD language can only be selected during the initial setup. To change the OSD language, you need to reset the settings. See Resetting the settings on page 27 for details.

OSD messages

A message **Out of Range** on the screen during computer boot up process.

If there is a message **Out of Range** on the screen during computer boot up process, this means computer compatibility caused by operating system or graphic card. The system will adjust the refresh rate automatically. Just wait until the operating system is launched.

Audio

No sound can be heard from the built-in speakers.

- Check whether the desired cable to input audio signals is properly connected. See Connect the headphone. on page 20 for details.
- Increase the volume (volume may be muted or too low).
- Remove your headphone and/or external speakers. (If they are connected to the monitor, the built-in speakers are automatically muted.)

Sensors (selected models only)

The light sensor of the monitor does not work well.

The light sensor is located at the front bottom of the monitor. Please check:

- If the **Visual Optimizer** function is enabled. See Adjusting screen brightness and color temperature automatically (Visual Optimizer)(GW90P only) on page 26 for details.
- If there are any obstacles in front of the sensor that keep the sensor from detecting the light properly.
- If there are any objects or clothing in bright colors in front of the sensor. Bright colors (especially white and fluorescent colors) reflect light and the sensor cannot detect the main light sources.

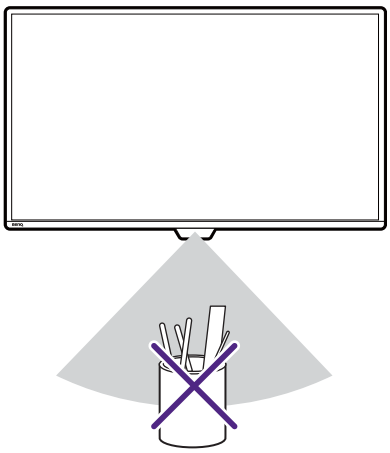

Need more help?

If your problems remain after checking this manual, please contact your place of purchase or visit the local website from Support.BenQ.com for more support and local customer service.

tehnoteka

https://cenoteka.rs

Ovaj dokument je originalno proizveden i objavljen od strane proizvođača, brenda BenQ, i preuzet je sa njihove zvanične stranice. S obzirom na ovu činjenicu, Cenoteka ističe da ne preuzima odgovornost za tačnost, celovitost ili pouzdanost informacija, podataka, mišljenja, saveta ili izjava sadržanih u ovom dokumentu.

Napominjemo da Cenoteka nema ovlašćenje da izvrši bilo kakve izmene ili dopune na ovom dokumentu, stoga nismo odgovorni za eventualne greške, propuste ili netačnosti koje se mogu naći unutar njega. Cenoteka ne odgovara za štetu nanesenu korisnicima pri upotrebi netačnih podataka. Ukoliko imate dodatna pitanja o proizvodu, ljubazno vas molimo da kontaktirate direktno proizvođača kako biste dobili sve detaljne informacije.

Za najnovije informacije o ceni, dostupnim akcijama i tehničkim karakteristikama proizvoda koji se pominje u ovom dokumentu, molimo posetite našu stranicu klikom na sledeći link:

https://cenoteka.rs/p/benq-monitor-27-ips-gw2791p/