tehnoteka

https://cenoteka.rs

Uputstvo za upotrebu (EN)

ASRock monitor 27'' QD-OLED Phantom Gaming PGO27QFV



Cenoteka je online destinacija za upoređivanje cena i karakteristika bele tehnike, potrošačke elektronike i IT uređaja kod trgovinskih lanaca i internet prodavnica u Srbiji. Naša stranica vam omogućava da istražite najnovije informacije, detaljne karakteristike i konkurentne cene proizvoda.

Posetite nas i uživajte u ekskluzivnom iskustvu pametne kupovine klikom na link:

https://cenoteka.rs/p/asrock-monitor-27-qd-oled-phantom-gaming-pgo27qfv/

ASRock



PG027QFV

User Manual

Contents

Chapter 1 Introduction **1**

1.1 Package Contents 1

Chapter 2 Setting up the Monitor **2**

2.1 Attaching the Stand Arm and Base 2

2.2 Detaching the Stand Arm and Base 5

2.3 Making Connections 6

2.4 Adjusting the Viewing Angle 12

2.5 Using the Security Slot 14

Chapter 3 Monitor Overview **15**

3.1 Front View 15

3.2 Rear View 16

3.3 Bottom View 18

Chapter 4 Specifications **19**

4.1 Monitor Specifications 19

4.2 Supported Timing List 21

Chapter 5 Operating the Monitor **23**

5.1 Powering On/Off the Monitor 23

5.2 Hot Keys 25

5.3 Using the Joystick Control 26

Chapter 6 OSD Setup **28**

6.1 Accessing the OSD Menu 28

6.2 OSD Menus 29

Chapter 7 Troubleshooting **38**

Chapter 8 Safety Instructions **39**

Chapter 1 Introduction

Thank you for purchasing PGO27QFV, a reliable monitor produced under ASRock's consistently stringent quality control. It delivers excellent performance with robust design conforming to ASRock's commitment to quality and endurance.

1.1 Package Contents

Your monitor ships with the components shown below. Please make sure that you have received all the components and contact your place of purchase or local distributor if any of the items is damaged or missing.

- ASRock PGO27QFV Monitor
- ASRock PGO27QFV Stand Arm
- ASRock PGO27QFV Stand Base
- ASRock PGO27QFV Quick Start Guide
- HDMI Cable
- DisplayPort Cable
- Wi-Fi Antenna Cables
- Power Cord

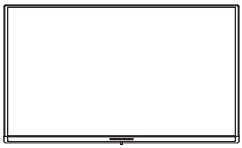
Monitor

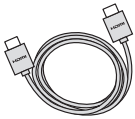
HDMI Cable


DisplayPort Cable

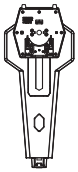
Stand Arm

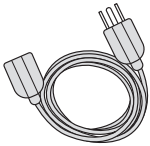
Power Cord




Stand Base



Quick Start Guide


Wi-Fi Antenna Cables

Important

Package contents may vary by country.

The included power cord is exclusively for this monitor and should not be used with other products.

English

Chapter 2 Setting up the Monitor

2.1 Attaching the Stand Arm and Base

Step 1. Installing the Stand Base

- Leave the monitor in its protective foam packaging.

> ⚠ Important
>
> Place the monitor in its protective foam packaging, or on a soft, protected surface to avoid scratching the display screen.

- Insert the stand base to the stand arm and tighten the screw at the bottom of the stand base.

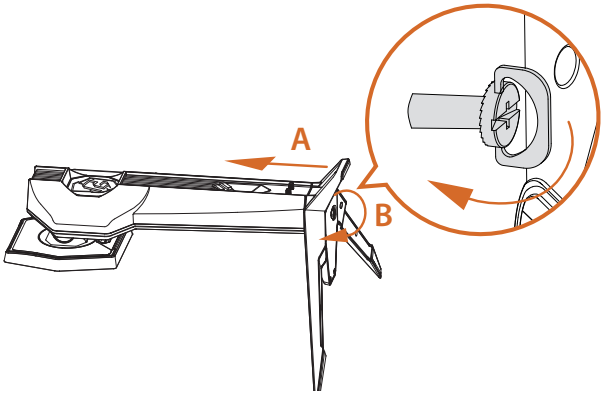

English

Step 2. Installing the Stand Arm

- Align and slide the two tabs on the stand arm to the groove on the back of the monitor until it snaps into place.
- Push the stand lock to the locked position to ensure the stability.

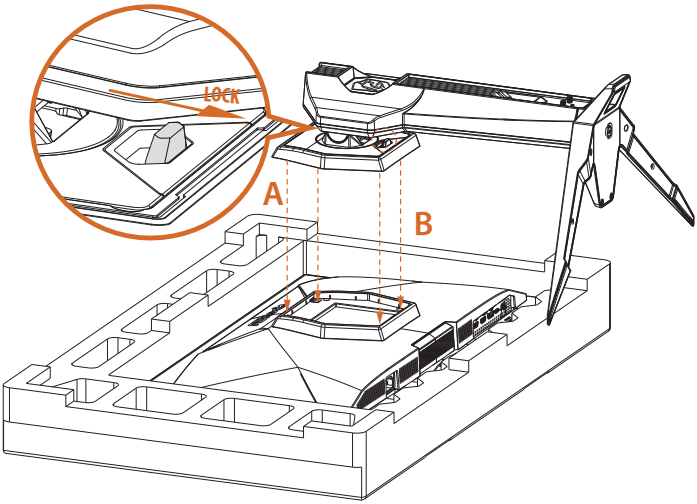

Step 3. Placing the Monitor Upright

Lift the monitor carefully out of the foam packaging and into its upright position on a flat, stable surface.

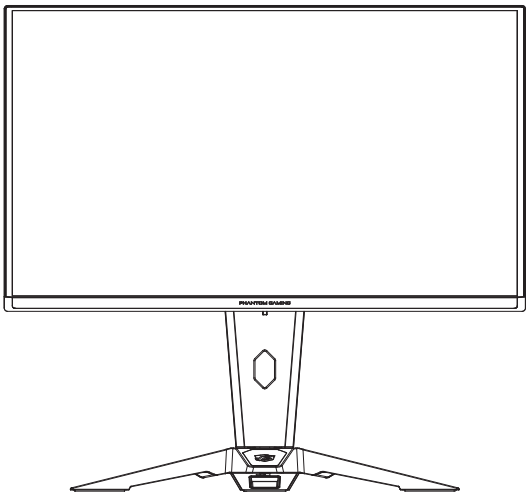



Important

Be careful not to touch or press the display screen areawhen lifting or moving the monitor to avoid any scratches or damage.

2.2 Detaching the Stand Arm and Base

Before removing the stand, be sure to turn off the monitor and disconnect all cables.

1. Push the stand lock to the unlock position. Lift upward to disengage the tabs on the stand arm from the monitor. Remove the stand (arm and base).

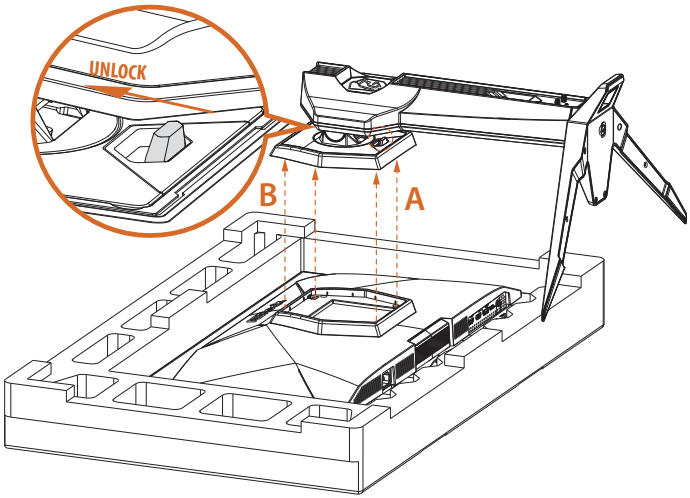

2. Release the screw at the bottom of the stand base. Pull to remove the stand base from the stand arm.

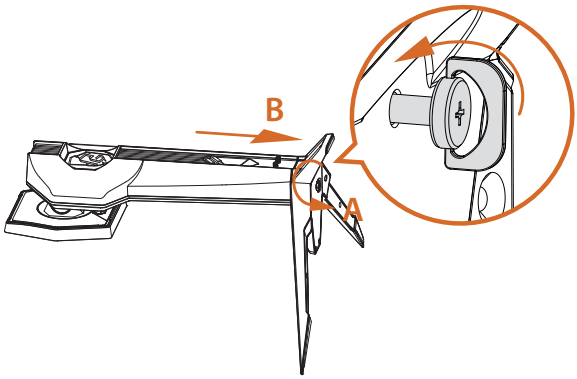

2.3 Making Connections

Connecting the Power Cord

Connect the power cord to the monitor and to an electrical wall outlet. Pass the cable through the cable management hole on the stand arm.

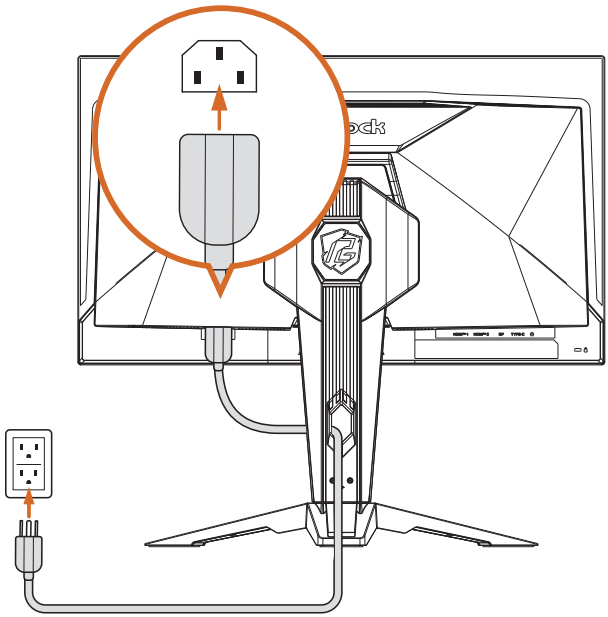

Important

Please make sure to make a grounding connection before connecting the power plug to the power source.

Additionally, when disconnecting the grounding connection, be sure to disconnect the power plug from the power source before proceeding.

English

Connecting the Monitor to the PC / Laptop

HDMI Connection

Connect one end of the HDMI cable to the HDMI connector on the rear side of the monitor. Then connect the other end to the HDMI connector on the PC or laptop. Pass the cable through the cable management hole on the stand arm.

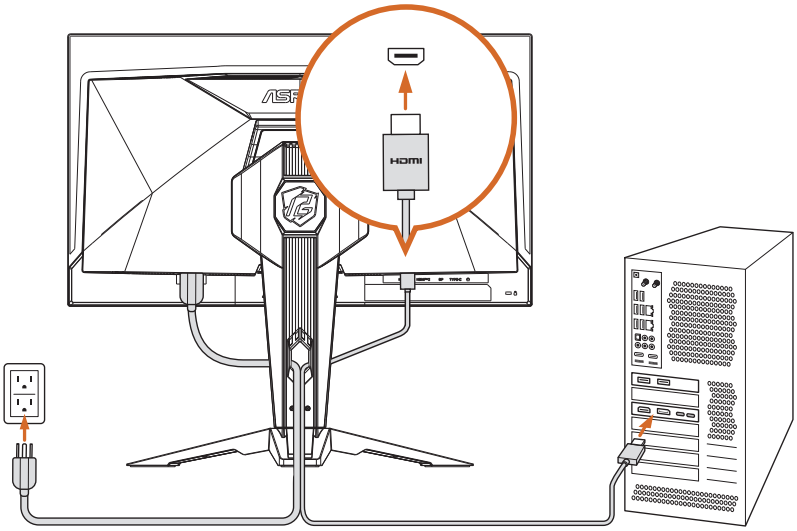

DisplayPort Connection

Connect one end of the DisplayPort cable to the DisplayPort input connector on the rear side of the monitor. Then connect the other end to the DisplayPort output connector on the PC or laptop. Pass the cable through the cable management hole on the stand arm.

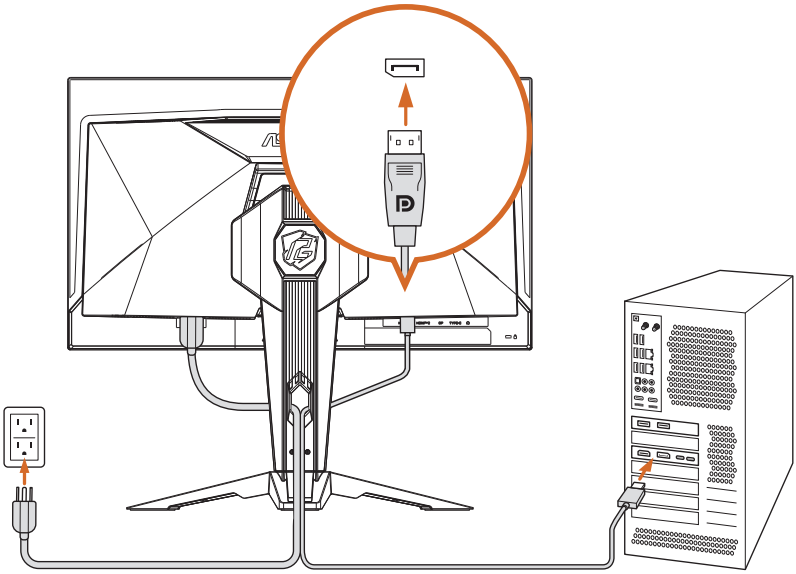

USB Type-C Connection (for Display and Power Delivery)

The type-C port on the rear side of the monitor is compatible with the DP Alt mode and USB power delivery.

Use a Type-C cable to connect the monitor to your laptop for an external display. You can also connect it to our smartphones or tablets to mirror your device's screen on the monitor, enabling you to share videos and photos with others.

Meanwhile, the monitor can charge your smartphones or tablets via the type-C cable. Please enable the USB Charging feature before charging your devices with this port. In the OSD menu, select "Extra" > "USB Charging" > "On".

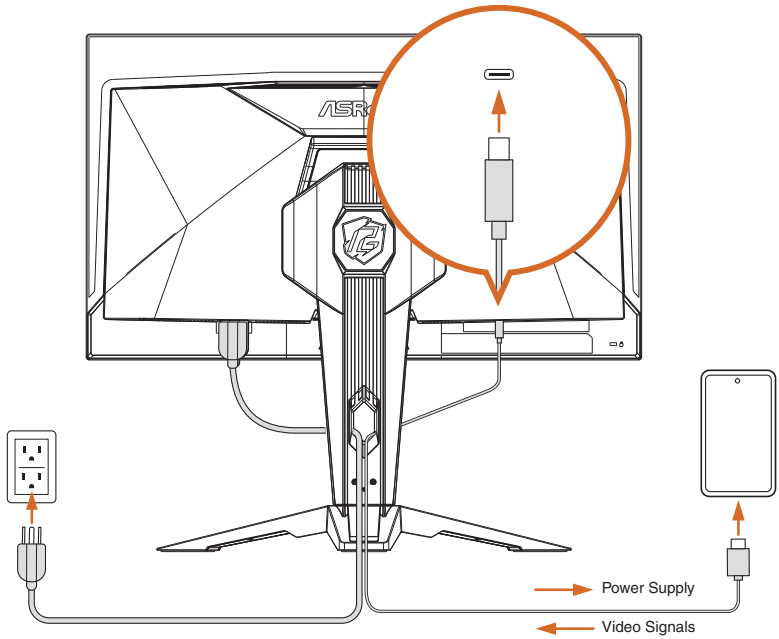

Important

Devices connected must be equipped with a USB-C connector, and support the charging function based on USB-C or USB Power Delivery.

Antenna Cable Connection

This monitor has a built-in Wi-Fi antenna. Placed on the table, the integrated antenna on the back of the monitor provides great Wi-Fi connectivity up to 7dBi peak gain. If your motherboard comes with built-in Wifi, use the provided antenna cables to turn your monitor a powerful wireless antenna.

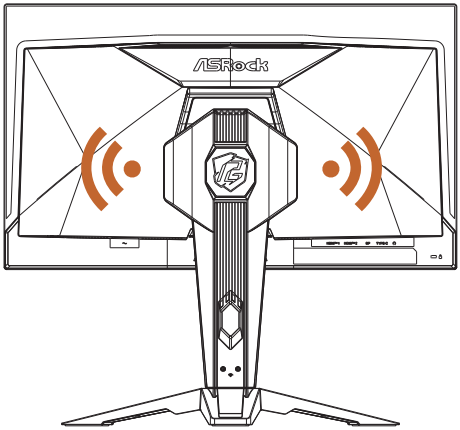

Two antenna ports are located on the back of the monitor stand. Connect one end of the antenna cable to the antenna connector on the stand and tighten it firmly. Then connect the other end to the antenna port on the PC.

* The transmission speed may vary according to the environment.

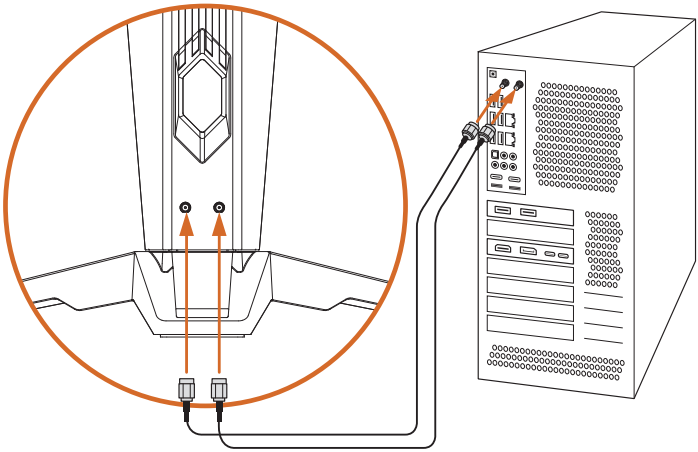

Audio Cable Connection

You can connect headphones to the headphone jack on the bottom side of the monitor.
Pass the cable through the cable management hole on the stand arm.

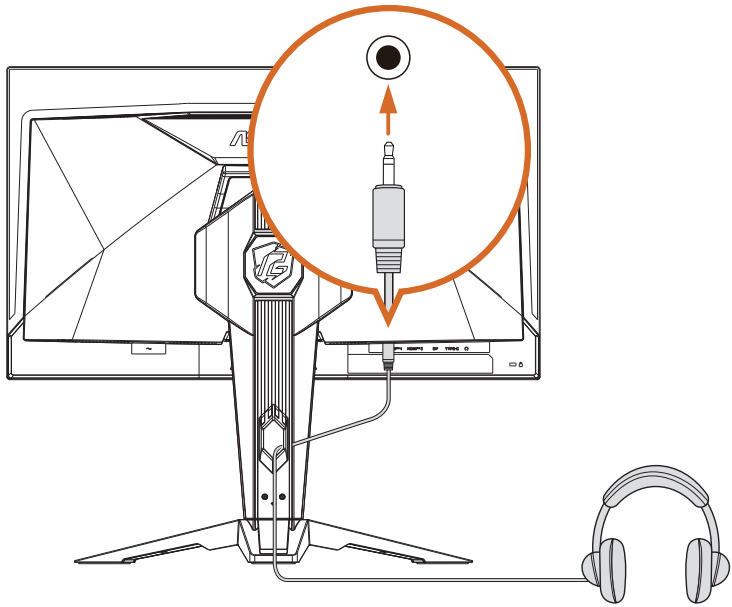

English

2.4 Adjusting the Viewing Angle

Tilt Angle Adjustment

For optimal viewing, it is recommended to look at the full face of the monitor, and then adjust the monitor's angle to your own preference.

Hold the stand firmly with one hand while tilting the monitor forwards or backwards with the other hand so you do not topple the monitor when you adjust the monitor's angle.

You are able to adjust the tilted angle from -7° to 20°.

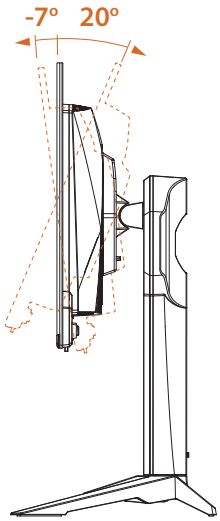



Important

Be careful not to touch or press the display screen area when adjusting the monitor.

English

Height Adjustment

You can lower or raise the monitor to the desired height.

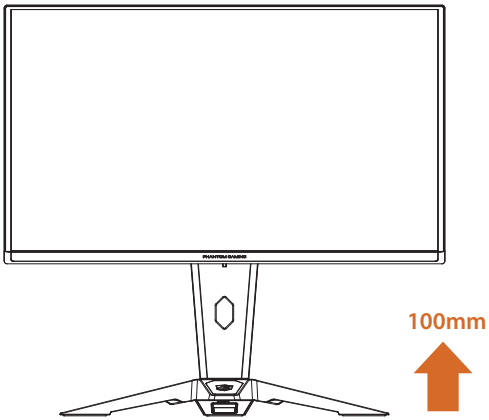

Swivel Angle Adjustment

You are able to swivel the monitor for the angle.

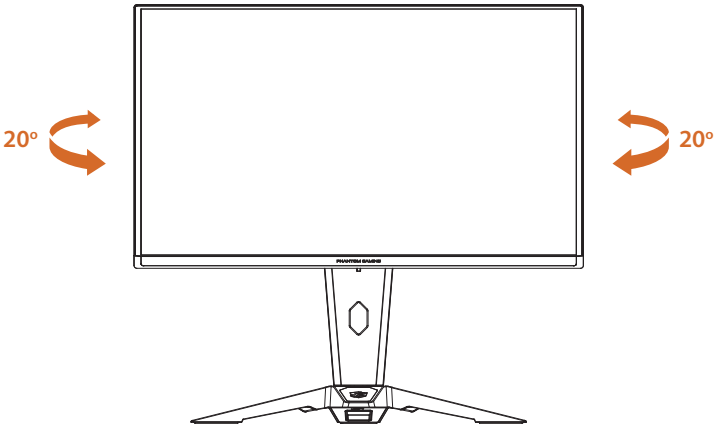



Important

Be careful not to touch or press the display screen area when adjusting the monitor.

2.5 Using the Security Slot

This monitor supports a Kensington-type security slot. The Kensington lock can be used to secure the monitor and prevent it from being stolen in public locations.

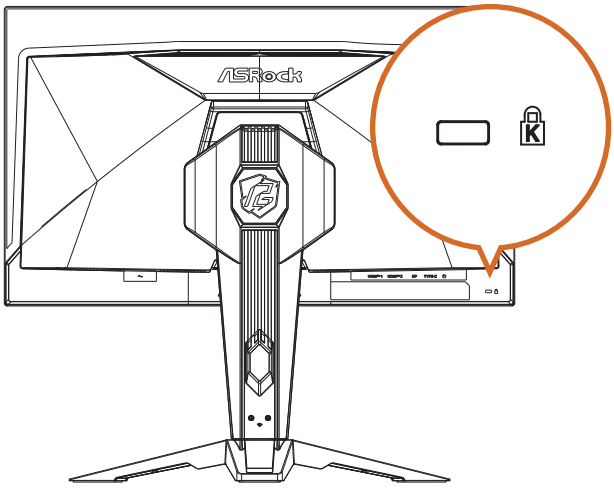

NOTE: Kensington lock is not included. You need to purchase an additional locking device.

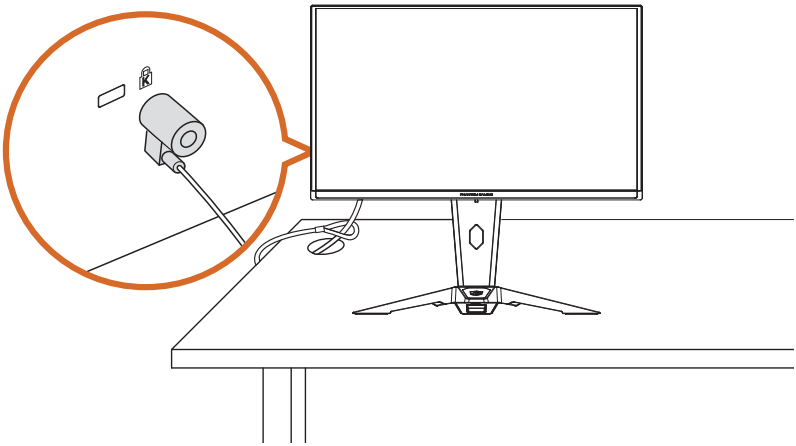

Chapter 3 Monitor Overview

3.1 Front View

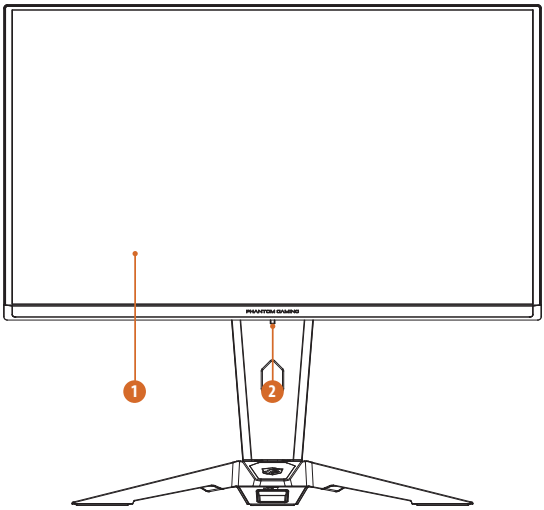

No.	Item	Description
1	Display screen	The display part of a monitor
2	Power Indicator / Pixel Clear Indicator	The color definition of the power indicator: • Solid White - Power on mode • Solid Orange - Standby mode (no signal input) • LED Off - Off mode In the Pixel Clear mode, the LED indicates the status of Pixel Clear: • Blinking Orange - Running Pixel Clear • Solid White - Pixel Clear is done. Note: During the Pixel Clear process, the screen will become completely black, and the indicator light will flash orange. Please wait patiently around 7 minutes. Once the Pixel Clear is completed, the screen will automatically light up, and the indicator light will turn solid white.

3.2 Rear View

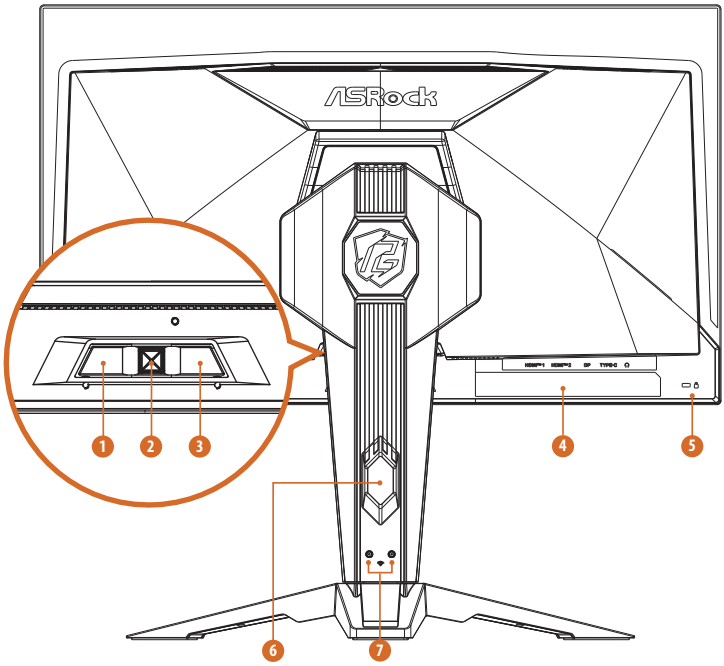

No.	Item	Description
1	Volume Button	Press to activate the volume control function.
2	Menu Button Hot Keys/Joystick	Press to activate the OSD Main Menu. Please see the sections entitled "Hot Keys" and "Using the Joystick Control" for more information.
3	Power On/Off Button	Press to turn the monitor on. Press again to turn the monitor off.
4	Serial Label	Lists the the model name of the monitor and the power rating information.

5	Kensington Lock Slot	Secures monitor with security lock (security lock not included).
6	Cable management Hole	Organize cables by passing them through the hole.
7	Antenna Ports	Connect the Wi-Fi antenna cables.

3.3 Bottom View

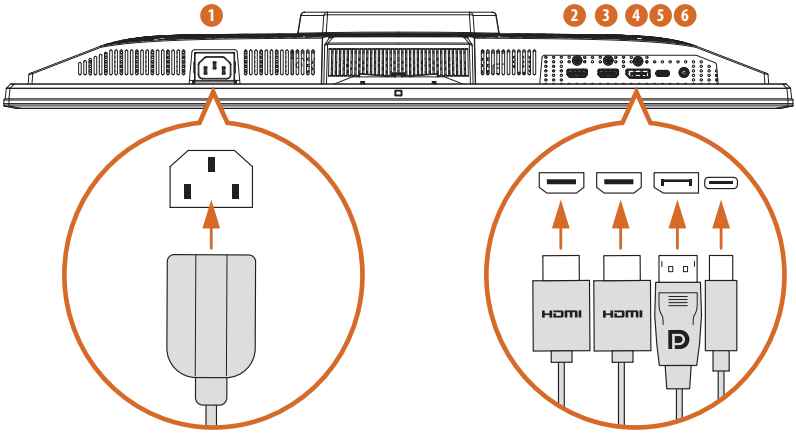

No.	Item	Description
1	AC-IN port	Connect the power cord.
2	HDMI 1 port	Connect your computer with the HDMI cable.
3	HDMI 2 port	Connect your computer with the HDMI cable.
4	DisplayPort	Connect your computer with the DisplayPort cable.
5	Type-C port (DP Alt Mode/PD 15W)	Connect your devices, such as laptops, smartphones, or tablets with the Type-C cables. (Purchase separately) Please enable the USB Charging feature before charging your devices with this port. In the OSD menu, select "Extra" > "USB Charging" > "On".
6	Audio output	Connect your headphones with the audio cable. (Purchase separately)

Chapter 4 Specifications

4.1 Monitor Specifications

Model	PGO27QFV	
Display	Panel Size	27"
	Viewing Area	587 x 330 mm (H x V)
	Aspect Ratio	16:9
	Panel Type	QD-OLED
	Viewing Angle	178°(H) / 178°(V)
	Resolution	QHD (2560 x 1440)
	Pixel Pitch	0.2292 mm
	Curvature	Flat
	Refresh Rate	360Hz
	Response Time	0.03 ms (GTG)
	Brightness (typ.)	250 nits (SDR Typ.) 1000 nits (HDR Peak)
	Color Space	99% DCI-P3 / 138% sRGB
	Display Colors	1.07B (10 bit)
	Contrast Ratio	1,500,000:1
	Display Surface	Anti-Glare
	HDR	VESA DisplayHDR™ True Black 400
	Low Blue Light	YES
	Adaptive Sync	AMD FreeSync™ Premium Pro
I/O Ports	HDMI	2 x HDMI™ 2.1
	DisplayPort	2 x DisplayPort™ 1.4
	Type-C	1 x Type-C (DP Alt Mode / PD 15W)
	Audio Out	1 x Headphone Out
Digital Signal Frequency	HDMI	30kHz~510KHz (H); 48Hz~360Hz (V)
	DP	30kHz~510KHz (H); 48Hz~360Hz (V)

Power Consumption	Power Consumption (Max)	≦ 100W
	Power Saving Mode	≦ 0.5 W
	Power Off Mode	≦ 0.3 W
	Voltage	100~240VAC, 50/60Hz, 2.7A
Mechanical Design	Tilt Adjustment	-7° ~ +20°
	Swivel Adjustment	-20° ~ +20°
	Height Adjustment	0~100 mm
	VESA Mount	100x100 mm (4 screw holes) M4*12 mm
Dimension (W x H x D)	Dimension with Stand	610 x 568 x 258 (mm)
	Dimension without stand	610 x 358 x 71 (mm)
Weight	Net Weight with Stand	7.6 kg
	Net Weight without Stand	5.4 kg
	Gross Weight	10.2 kg
Environment	Operating	• Temperature: 0℃ to 40℃ • Humidity: 20% to 80%, non-condensing • Altitude: 0 ~ 5000m
	Storage	• Temperature: -20℃ to 60℃ • Humidity: 20% to 80%, non-condensing • Altitude : 0~12192m
Accessories (Vary by region)	1 x HDMI v2.0 (1.5m) 1 x DP v1.4 (1.5m) 1 x Power Cord (1.5m) 1 x Quick Start Guide 1 x Wi-Fi Antenna Cables Set 1 x Phantom Gaming Cable Sleeve	
Unique Feature	Integrated Wi-Fi Antenna	
Certificate	VESA DisplayHDR™ True Black 400 AMD FreeSync™ Premium Pro	

4.2 Supported Timing List

Standard	Resolution	PGO27QFV	
		HDMI	DP
IBM MODE DOS	720x400 @70Hz	V	V
VGA	640x480 @60Hz	V	V
	640x480 @67Hz	V	V
	640x480 @72Hz	V	V
	640x480 @75Hz	V	V
SVGA	800x600 @56Hz	V	V
	800x600 @60Hz	V	V
	800x600 @72Hz	V	V
	800x600 @75Hz	V	V
XGA	1024x768 @60Hz	V	V
	1024x768 @70Hz	V	V
	1024x768 @75Hz	V	V
SXGA	1280x1024 @60Hz	V	V
	1280x1024 @75Hz	V	V
WXGA+	1440x900 @60Hz	V	V
WSXGA+	1680x1050 @60Hz	V	V
----	1152x864 @75Hz	V	V
	1280x960 @60Hz	V	V
	1280x720 @60Hz	V	V
Full HD	1920x1080 @60Hz	V	V
	1920x1080 @240Hz	V	V
	1920x1080 @360Hz	V	V
QHD	2560x1440 @60Hz	V	V
	2560x1440 @120Hz	V	V
	2560x1440 @240Hz	V	V
	2560x1440 @360Hz	V	V

Video Timing Resolution	640x480P 59.94/60Hz 4:3	V	V
	1280x720P 50Hz 16:9	V	V
	1280x720P 59.94/60Hz 16:9	V	V
	1920x1080P 59.94/60Hz 16:9	V	V
	1920x1080P 119.88/120Hz 16:9/1:1	V	V
	2160P @30Hz	V	
	2160P @50Hz	V	
	2160P @60Hz	V	
	2160p @120Hz	V	

Chapter 5 Operating the Monitor

5.1 Powering On/Off the Monitor

Press the Power button (the rightest one on the rear side of the monitor) to turn on the monitor. The power indicator on the front of the monitor lights up in solid white to show that the monitor is ON.

To turn the monitor off, press the Power button and the LED light on the Power button will turn OFF.

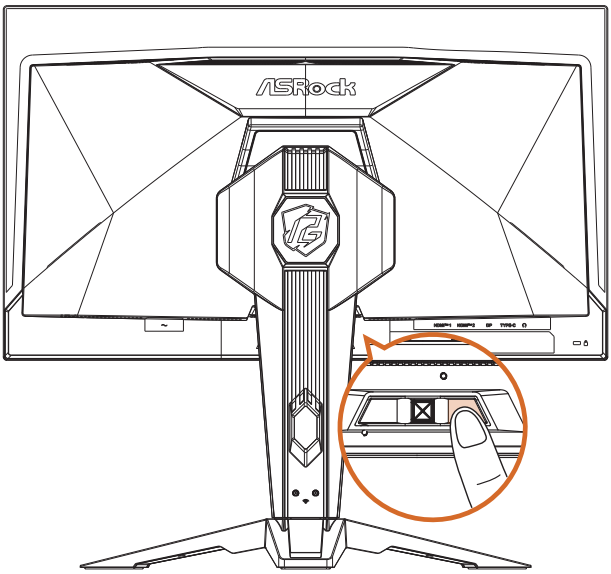

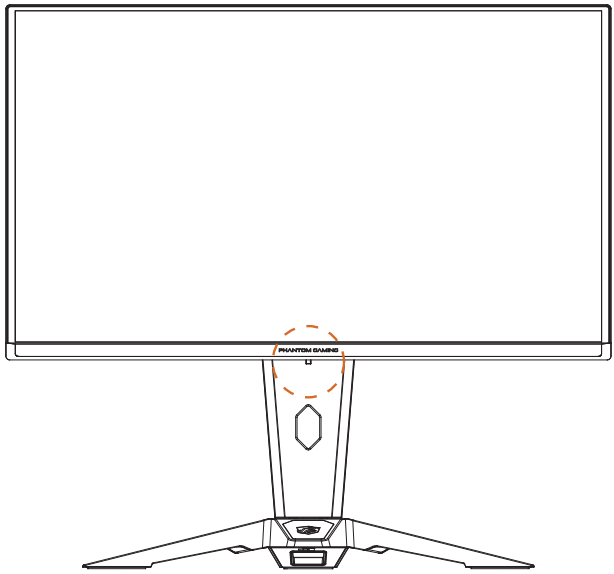

The color definition of the power indicator:

LED Indicator	Status	Description
Solid White	On	Solid white light indicates the monitor is turned on.
Solid Orange	Standby	Solid orange light indicates the monitor is in standby mode.
LED Off	Off	No light indicates the monitor is turned off.

5.2 Hot Keys

When the OSD screen is off, press the control buttons on the rear side of the monitor to access the OSD menu, change the input source, and adjust the brightness and the volume.

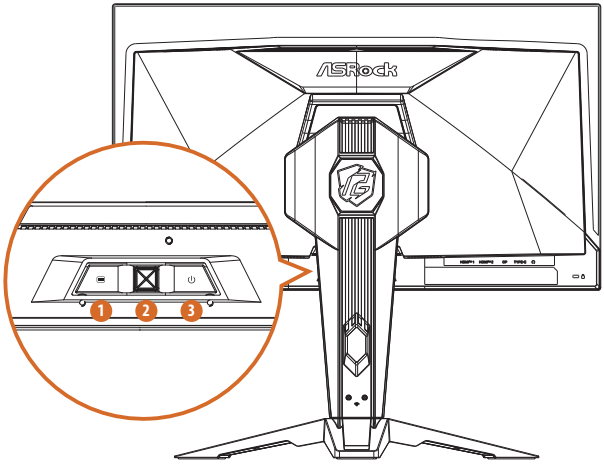

No.	Icon	Hot Key (When OSD is OFF)
1		**VOLUME** Press to activate the Volume control function.
2		**MENU** Press to activate the OSD Main Menu. **INPUT SOURCE** Toggle left (when facing the front side of the monitor) to activate the input sources selection. **BRIGHTNESS** Toggle right (when facing the front side of the monitor) to activate the Brightness control function.
3		**POWER** Press the power button to turn on/off the monitor.

5.3 Using the Joystick Control

When the OSD screen is on, use the joystick on the rear side of the monitor to navigate the OSD menu and adjust the settings.

1. To access the OSD menu, press the joystick button to launch the OSD main menu.
2. Move the joystick up/down/left/right to toggle between options.
3. Press the joystick button again to confirm the settings.
4. Toggle left to exit the OSD menu.

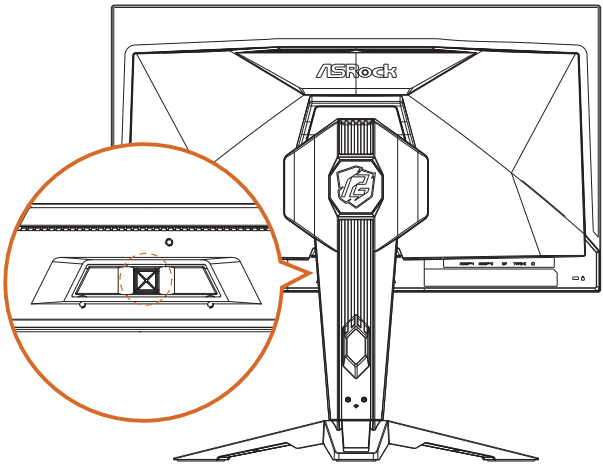

No.	Action		Joystick Control (When OSD is ON)
1	Press	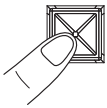	When the OSD menu is ON, press to confirm the selection (Enter) or save the settings (OK).
2	Toggle Left		Toggle left (when facing the front side of the monitor) to select menu items (Move), go back to the previous menu (Back) or exit the OSD menu (Exit) Decreases the parameters of the selected menu item (Adjust).

3	Toggle Right		Toggle right (when facing the front side of the monitor) to select menu items or go to the next menu (Move). Increases the parameters of the selected menu item (Adjust).
4	Toggle Up		Toggle up to select menu items (Move).
5	Toggle Down		Toggle down to select menu items (Move).

Chapter 6 OSD Setup

This chapter provides you with essential information on OSD Setup.

> **Important**
>
> All information is subject to change without prior notice.

6.1 Accessing the OSD Menu

After you press the Menu button, the OSD menu appears on the lower right corner of your monitor screen.

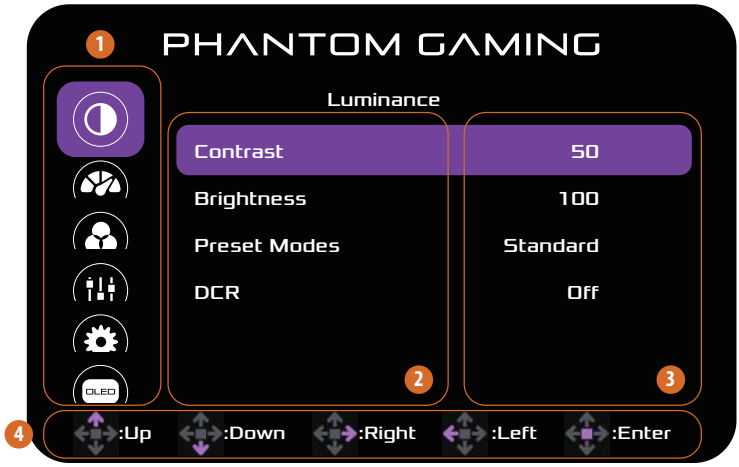

No.	Item	Description
1	Main Menu Item	Displays the main menu items.
2	Sub Menu Item	Displays the sub menu items.
3	Sub Menu	Displays the sub menu.
4	OSD Key	Follow the key guide displayed on the bottom of the OSD screen to move or select (adjust) OSD settings.

6.2 OSD Menus

Function: Luminance

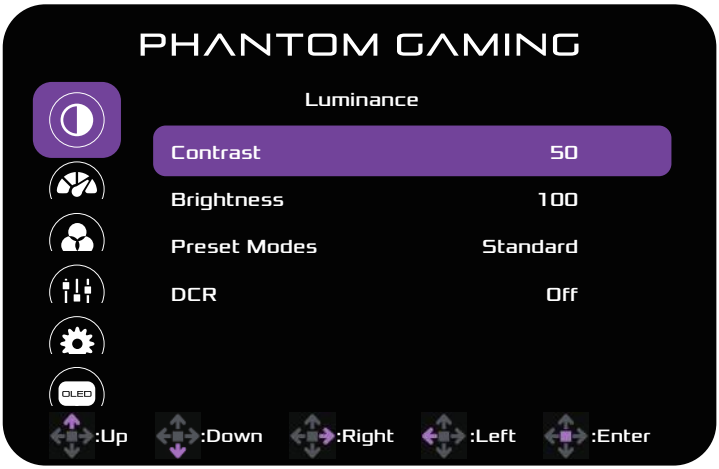

Main Menu Item	Sub Menu Item	Sub Menu	Description
Luminance	Contrast	0-100	Contrast adjusts the degree of difference between darkness and lightness on the monitor screen.
	Brightness	0-100	Brightness adjusts the luminance of the backlight.
	Preset Modes	Standard	Loads the monitor's default color settings.
		Text	This scene mode is for document editing.
		Internet	Select this mode for browsing websites.
		Game	Select this mode for game playing.
		Movie	Select this mode for movie watching.
		Sports	Select this mode for fast moving scenes.
	DCR	On	Turn Dynamic contrast ratio On or Off. DCR can lower the backlight for dark scenes and increase the backlight for bright scenes.
		Off	

Function: Image Setup

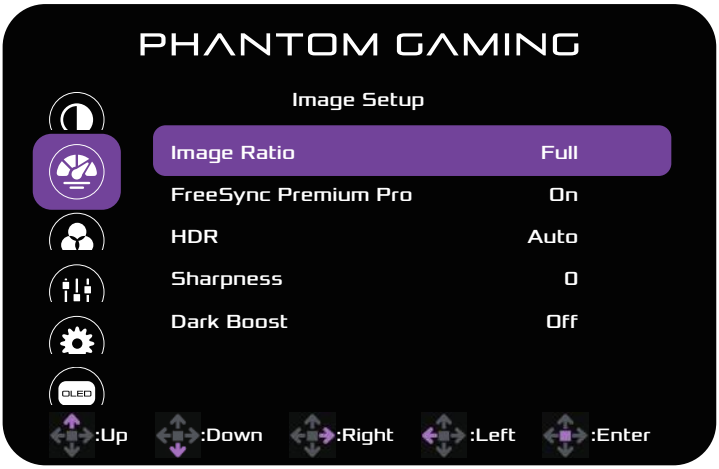

Main Menu Item	Sub Menu Item	Sub Menu	Description
Image Setup	Image Ratio	Full	Select Image Aspect Ratio.
		Aspect	
	FreeSync Premium Pro	On	The AMD FreeSync Premium Pro technology effectively prevents screen tearing and stuttering, crafting a superior and seamless visual feast.
		Off	
	HDR	Auto	Turn HDR Auto or Off. When this is set to "Auto", HDR feature will be automatically enabled if your input source supports HDR. HDR can enhance visual experiences, providing richer colors, deeper contrasts, and more realistic images.
		Off	
	Sharpness	0-5	Sharpness improves the clarity of the displayed images outline and produces high-quality visuals on the screen.
	Dark Boost	On	This boosts the amplitude of the dark color levels of the display.
		Off	

Function: Color Temp.

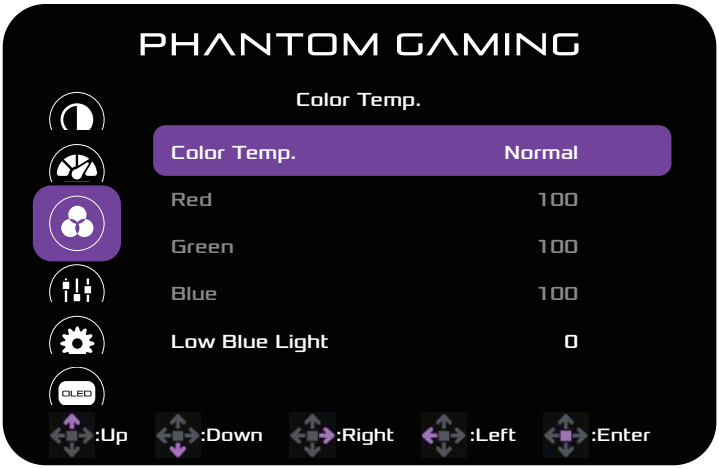

Main Menu Item	Sub Menu Item	Sub Menu		Description
Color Temp.	Warm	–		Increases the color temperature. The screen appears warmer with a red/yellow tint.
	Normal	–		Loads the monitor's default color settings.
	Cool	–		Decreases the color temperature. The screen appears cooler with a blue tint.
	User	Red	0-100	Allows you to manually adjust the color settings. Press the Up and Down buttons to adjust the three colors (Red, Green, Blue) values and create your own preset color mode.
		Green	0-100	
		Blue	0-100	
	Low Blue Light	0-10 (Level)		The Low Blue Light Technology reduces the emission of harmful blue lights on a display to prevent eye fatigue.

English

Function: OSD Setup



Main Menu Item	Sub Menu Item	Sub Menu	Description
OSD Setup	H. Position	0-100	Adjusts the horizontal position of OSD.
	V. Position	0-100	Adjusts the vertical position of OSD.
	Timeout	5-100	Select how many seconds when the OSD menu remains visible on the screen before it automatically vanishes.
	Language	–	Select the OSD language.

Function: Extra



Main Menu Item	Sub Menu Item	Sub Menu	Description
Extra	Input Select	Auto	Search for an available input source and select automatically.
		HDMI1	Select the HDMI1 input.
		HDMI2	Select the HDMI2 input.
		DisplayPort	Select the DisplayPort input.
		Type C	Select the Type-C input.
	USB Charging	On	The USB Charging feature is disabled by default. Turn on the USB Charging to activate USB Type-C charging on the monitor, allowing devices to charge even in sleep mode. Note: If the monitor is powered off, it stops charging.
		Off	
	DDC/CI	On	Turn ON/OFF DDC/CI Support.
		Off	
	Reset	No	Restore all OSD settings to factory defaults.
		Yes	
	Information	–	Shows the information of the main image source.

Function: OLED Care



Main Menu Item	Sub Menu Item	Sub Menu	Description
OLED Care	Pixel Shift	Slow	The Pixel shift feature moves the image a couple of pixels at regular intervals to prevent image retention. You can select the Pixel Shift speed. Three preset intervals are offered : Slow, Normal, and Fast
		Normal	
		Fast	
	Pixel Clear	Standby	Select "Execute" to run Pixel Clear immediately when needed to prevent image burn-in. The process may take approximately 7 minutes to complete. During this process, do not unplug the monitor. The power indicator will blink orange until the process is done. If you want to cancel the ongoing Pixel Clear process, press the power button.
		Execute	

<table>
<tr><td rowspan="6">OLED Care</td><td rowspan="6">Static Screen Detection</td><td colspan="2">Off</td><td rowspan="3">Static Screen Detection can protect against burn-in from prolonged display of static content.

When enabled, it detects if there are static images on the screen for a preset period of time, and the monitor will reduce brightness automatically.

As soon as a moving image is detected, the monitor will restore the original set brightness.

You can adjust brightness level and the duration of time before brightness adjustment.</td></tr>
<tr><td colspan="2">On</td></tr>
<tr><td rowspan="2">Starting in</td><td>50 Sec</td><td rowspan="2">Sets the duration of detecting a static image.

When "50 Sec/100 Sec" is selected, the monitor will reduce brightness automatically after detecting a static image for 50/100 seconds.</td></tr>
<tr><td>100 Sec</td></tr>
<tr><td rowspan="2">Time required</td><td>120 Sec</td><td rowspan="2">Specifies the time needed for the screen brightness to be reduced to the reducing level you set, after detecting a static image.</td></tr>
<tr><td>240 Sec</td></tr>
<tr><td>Reducing Level</td><td>1-7</td><td>You can select the brightness reduction level, ranging from Level 1 to Level 7. Level 7 is the dimmest mode. The reducing effect depends on the Brightness and DisplayHDR settings.</td></tr>
</table>

OLED Care	Multi Logo Detection	0-2 (Level)	The Multi Logo Detection feature can prevent image retention by detecting multiple static logos on the screen and decreasing brightness in those areas. You can select the brightness reduction level, ranging from Level 0 to Level 2. Level 2 is the dimmest mode. The reducing effect depends on the Brightness and DisplayHDR settings.
	Taskbar Detection	0-3 (Level)	The Taskbar Detection feature can prevent image retention by detecting the taskbar and reducing brightness in that area. You can select the brightness reduction level, ranging from Level 0 to Level 3. Level 3 is the dimmest mode. The reducing effect depends on the Brightness and DisplayHDR settings.
	Boundary Detection	0-3 (Level)	The Boundary Detection feature can prevent image retention by dimming the brightness of detected areas with a large difference in brightness levels, such as black bars at the top, bottom, left, and right edges of the screen, as well as vertical lines and image contours. You can select the brightness reduction level, ranging from Level 0 to Level 3. Level 3 is the dimmest mode. The reducing effect depends on the Brightness and DisplayHDR settings.

<table>
<tr><td rowspan="3">OLED Care</td><td rowspan="2">Protect Notice</td><td>Auto</td><td rowspan="2">Protect Notice will remind users time to run Pixel Clear. When it is set to "Auto", a notice will appear after every 4 hours of cumulative use. Users can skip doing Pixel Clear until continuously 16 hours of usage and the system will force users to do Pixel Clear then for protecting the OLED panel.

When it is set to "Usage 16 Hours", a notice will only show up after 16 hours of cumulative use, and Pixel Clear will be executed mandatorily to prevent OLED screen degradation caused by prolonged continuous use.

If panel protection is interrupted, the Protect Notice reappears the next time when the monitor is turned on.</td></tr>
<tr><td>Usage 16 Hours</td></tr>
<tr><td colspan="2">OLED Panel Info.</td><td>This section displays OLED Care information.</td></tr>
</table>

English

Chapter 7 Troubleshooting

Problem and Question	Possible Solution
Power LED is not on	• Check if the Power button is pressed and the monitor is power on. • Power Cord should be connected.
No signal	• Check that the video cable is properly connected. If the connector is loose, tighten the connector's screws. • Check the video cable's connection pins for damage.
Picture is fuzzy	• Adjust the Contrast and Brightness Controls.
Picture bounces or a wave pattern is present in the picture	• Move electrical devices that may cause electrical interference.
The power LED is ON (White) but there's no video or no picture.	• Computer Power Switch should be in the ON position. • Computer Graphics Card should be snugly seated in its slot. • Make sure Monitor's video cable is properly connected to the computer. • Inspect Monitor's video cable and make sure none of the pins are bent.
Missing one of the primary colors (RED, GREEN, or BLUE)	• Inspect the Monitor's video cable and make sure that none of the pins are bent.
Picture has color defects (white does not look white)	• Adjust RGB color or select color temperature.
Poor brightness or contrast	• When the brightness of the screen lowers after being used for a certain period and the function of the display is affected, send it to our authorized service center for repair.
Unable to open OSD menu.	• Turn off your monitor, unplug the power cord and plug it back in, then power on the monitor.

Chapter 8 Safety Instructions

- Read the safety instructions carefully and thoroughly.
- All cautions and warnings on the device or User Guide should be noted.
- Refer servicing to qualified personnel only.

Safety Information

- Make sure that the power voltage is within its safety range and has been adjusted properly to the value of 100~240V before connecting the device to the power outlet.
- To avoid electrical shock, always use the power cord and plug with a properly grounded power outlet.
- If the power cord comes with a 3-pin plug, do not disable the protective earth pin from the plug.
- Always disconnect the power cord or switch the wall socket off if the device would be left unused for a certain time to achieve zero energy consumption.
- Place the power cord in a way that people are unlikely to step on it. Do not place anything on the power cord.
- If this device comes with an adapter, use only the ASRock provided AC adapter approved for use with this device.
- To prevent fire or shock hazard, never expose the monitor to rain or moisture.
- Never try to open the monitor cabinet. The dangerous high voltages inside the monitor may result in serious physical injury.
- Never place this product near or over a radiator or heat source unless proper ventilation is provided.
- Do not overload power strips and extension cords. Overloading can result in fire or electric shock.
- Never push objects or spill liquid of any kind into the slots on the monitor cabinet.

European Union:



Batteries, battery packs, and accumulators should not be disposed of as unsorted household waste. Please use the public collection system to return, recycle, or treat them in compliance with the local regulations.

California, USA:



The button cell battery may contain perchlorate material and requires special handling when recycled or disposed of in California. For further information please visit: https://dtsc.ca.gov/perchlorate/

Canadian Department of Communications Statement

This digital apparatus does not exceed the Class B limits for radio noise emissions from digital apparatus set out in the Radio Interference Regulations of the Canadian Department of Communications.

This class B digital apparatus complies with Canadian ICES-003.

This Class B digital apparatus meets all requirements of the Canadian Interference - Causing Equipment Regulations.

Cet appareil numérique de la classe B respecte toutes les exigences du Réglement sur le matériel brouiller du Canada.

Environment

- To reduce the possibility of heat-related injuries or of overheating the device, do not place the device on a soft, unsteady surface or obstruct its air ventilators.
- Use this device only on a hard, flat and steady surface.
- To prevent the device from tipping over, secure the device to a desk, wall or fixed object with an anti-tip fastener that helps to properly support the device and keep it safe in place.
- To prevent fire or shock hazard, keep this device away from humidity and high temperature.
- Do not leave the device in an unconditioned environment with a storage temperature above 60℃ or below -20℃ , which may damage the device.
- The maximum operating temperature is around 40℃ .
- When cleaning the device, be sure to remove the power plug. Use a piece of soft cloth rather than industrial chemical to clean the device. Never pour any liquid into the opening; that could damage the device or cause electric shock.
- Always keep strong magnetic or electrical objects away from the device.
- If any of the following situations arises, get the device checked by service personnel:
  - The power cord or plug is damaged.
  - Liquid has penetrated into the device.
  - The device has been exposed to moisture.
  - The device does not work well or you can not get it working according to the User Guide.
  - The device has dropped and damaged.
  - The device has obvious sign of breakage.

Warning!

Overuse of screens is likely to affect eyesight.

Recommendations:

Take a 10-minute break for every 30 minutes of screen time.

Children under 2 years of age should have no screen time. For children aged 2 years and over, screen time should be limited to less than one hour per day.

CE Conformity



This device complies with the requirements set out in the Council Directive on the Approximation of the Laws of the Member States relating to Electromagnetic Compatibility (2014/30/EU), Low-voltage Directive (2014/35/EU), ErP Directive (2009/125/EC) and RoHS directive (2011/65/EU). This product has been tested and found to comply with the harmonized standards for Information Technology Equipment published under Directives of Official Journal of the European Union.

ASRock Contact Information

ASRock EUROPE B.V.

Address : Bijsterhuizen 11-11, 6546 AR Nijmegen,The Netherlands

Phone: +31-24-345-44-33

Technical Support

Phone: +31-24-345-44-33

Online Support https://event.asrock.com/tsd.asp

FCC-B Radio Frequency Interference Statement



This equipment has been tested and found to comply with the limits for a Class B digital device, pursuant to Part 15 of the FCC Rules. These limits are designed to provide reasonable protection against harmful interference in a residential installation. This equipment generates, uses and can radiate radio frequency energy and, if not installed and used in accordance with the instruction manual, may cause harmful interference to radio communications. However, there is no guarantee that interference will not occur in a particular installation. If this equipment does cause harmful interference to radio or television reception, which can be determined by turning the equipment off and on, the user is encouraged to try to correct the interference by one or more of the measures listed below:

- Reorient or relocate the receiving antenna.
- Increase the separation between the equipment and receiver.
- Connect the equipment into an outlet on a circuit different from that to which the receiver is connected.
- Consult the dealer or an experienced radio/television technician for help.

Notice 1

The changes or modifications not expressly approved by the party responsible for compliance could void the user's authority to operate the equipment.

Notice 2

Shielded interface cables and AC power cord, if any, must be used in order to comply with the emission limits.

This device complies with Part 15 of the FCC Rules. Operation is subject to the following two conditions:

- This device may not cause harmful interference
- This device must accept any interference received, including interference that may cause undesired operation.

ASRock Contact Information

ASRock America, Inc.

Address : 13848 Magnolia Ave, Chino, CA91710, U.S.A.

Phone: +1-909-590-8308

Technical Support

Phone: +1-909-590-8308

Online Support https://event.asrock.com/tsd.asp

WEEE Statement



Under the European Union (“EU”) Directive on Waste Electrical and Electronic Equipment, Directive 2012/19/EU, products of “electrical and electronic equipment” cannot be discarded as municipal waste anymore and manufacturers of covered electronic equipment will be obligated to take back such products at the end of their useful life.

Chemical Substances Information

In compliance with chemical substances regulations, such as the EU REACH Regulation (Regulation EC No. 1907/2006 of the European Parliament and the Council), ASRock provides the relevant information at:
https://asrock.com/general/about.asp?cat=Responsibility

RoHS Statement

Japan JIS C 0950 Material Declaration

A Japanese regulatory requirement, defined by specification JIS C 0950, mandates that manufacturers provide material declarations for certain categories of electronic products offered for sale after July 1, 2006.

HDMI® HIGH-DEFINITION MULTIMEDIA INTERFACE

The terms HDMI, HDMI High-Definition Multimedia Interface, HDMI trade dress and the HDMI Logos are trademarks or registered trademarks of HDMI Licensing Administrator, Inc.

UK CA

English

Copyright and Trademarks Notice

Copyright © ASRock Inc. All rights reserved. The ASRock logo used is a registered trademark of ASRock Inc. All other marks and names mentioned may be trademarks of their respective owners. No warranty as to accuracy or completeness is expressed or implied. ASRock reserves the right to make changes to this document without prior notice.

Technical Support

If a problem arises with your product and no solution can be obtained from the user's manual, please contact your place of purchase or local distributor. Alternatively, please visit https://www.asrock.com for further guidance.

Product information for EU energy label

https://eprel.ec.europa.eu/qr/2165217

Copyright Notice

No part of this documentation may be reproduced, transcribed, transmitted, or translated in any language, in any form or by any means, except duplication of documentation by the purchaser for backup purpose, without written consent of ASRock Inc.

Products and corporate names appearing in this documentation may or may not be registered trademarks or copyrights of their respective companies, and are used only for identification or explanation and to the owners' benefit, without intent to infringe.

Disclaimer

Because the monitor specifications and the firmware might be updated, the content of this documentation will be subject to change without notice. In case any modifications of this documentation occur, the updated version will be available on ASRock's website without further notice. If you require technical support related to this monitor, please visit our website for specific information about the model you are using. You may find the latest monitor support list on ASRock's website as well.

ASRock Website: http://www.asrock.com

Version 1.0
Published March 2025
Copyright©2025 ASRock INC. All rights reserved.

tehnoteka

https://cenoteka.rs

Ovaj dokument je originalno proizveden i objavljen od strane proizvođača, brenda ASRock, i preuzet je sa njihove zvanične stranice. S obzirom na ovu činjenicu, Cenoteka ističe da ne preuzima odgovornost za tačnost, celovitost ili pouzdanost informacija, podataka, mišljenja, saveta ili izjava sadržanih u ovom dokumentu.

Napominjemo da Cenoteka nema ovlašćenje da izvrši bilo kakve izmene ili dopune na ovom dokumentu, stoga nismo odgovorni za eventualne greške, propuste ili netačnosti koje se mogu naći unutar njega. Cenoteka ne odgovara za štetu nanesenu korisnicima pri upotrebi netačnih podataka. Ukoliko imate dodatna pitanja o proizvodu, ljubazno vas molimo da kontaktirate direktno proizvođača kako biste dobili sve detaljne informacije.

Za najnovije informacije o ceni, dostupnim akcijama i tehničkim karakteristikama proizvoda koji se pominje u ovom dokumentu, molimo posetite našu stranicu klikom na sledeći link:

https://cenoteka.rs/p/asrock-monitor-27-qd-oled-phantom-gaming-pgo27qfv/