tehnoteka

https://cenoteka.rs

Uputstvo za upotrebu

SENCOR friteza na vruć vazduh SFR 9100SS

SENCOR



Cenoteka je online destinacija za upoređivanje cena i karakteristika bele tehnike, potrošačke elektronike i IT uređaja kod trgovinskih lanaca i internet prodavnica u Srbiji. Naša stranica vam omogućava da istražite najnovije informacije, detaljne karakteristike i konkurentne cene proizvoda.

Posetite nas i uživajte u ekskluzivnom iskustvu pametne kupovine klikom na link:

https://cenoteka.rs/p/sencor-friteza-na-vruc-vazduh-sfr-9100ss/

SENCOR®

SFR 9100SS

EN

AIR FRYER

Translation of the original manual

SENCOR®

SFR 9100SS



A

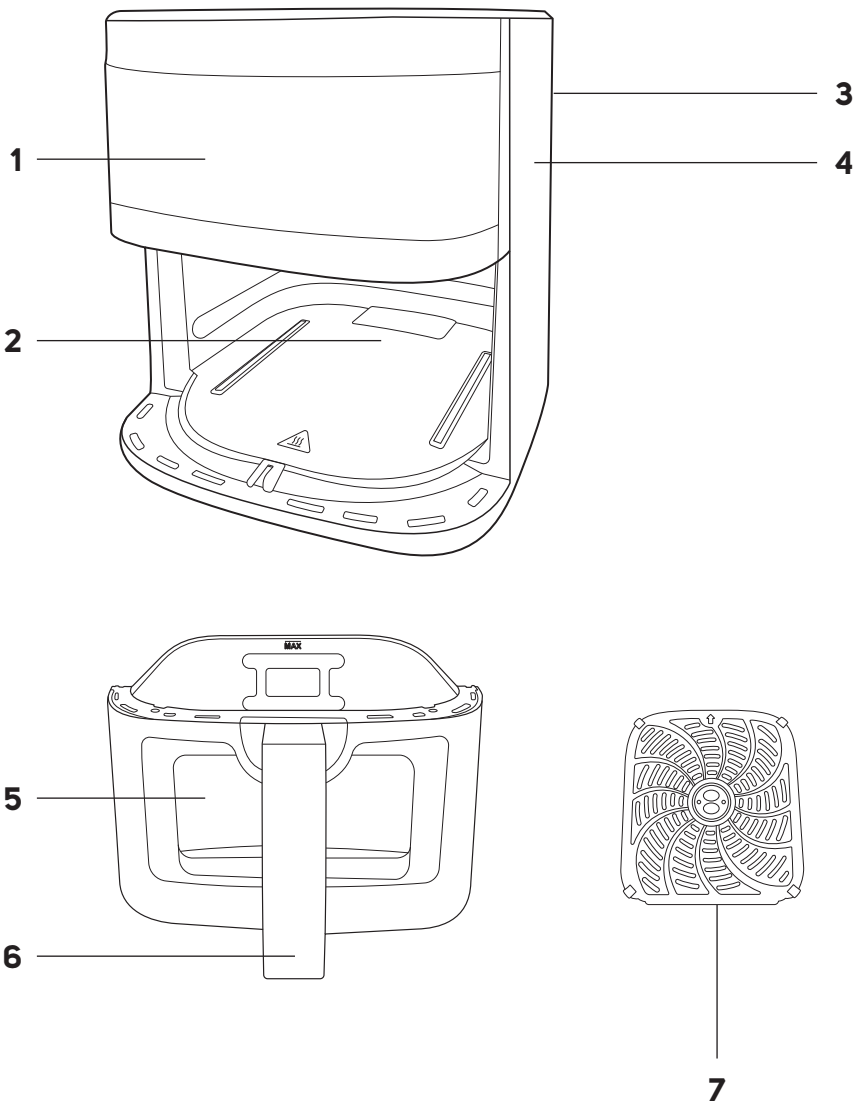

B

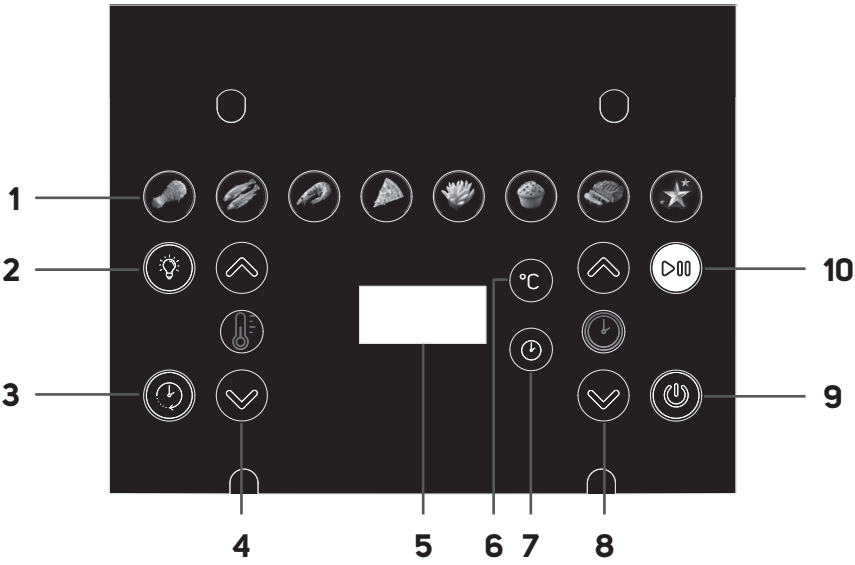

EN Air Fryer
User Manual

Important Safety Instructions

READ CAREFULLY AND STORE FOR FUTURE USE.

- This appliance may be only used by children aged 8 years and older and by persons with physical, sensory or mental impairments or lack of experience and knowledge, if they are supervised or have been instructed on the safe use of the appliance and understand the potential hazards.
- Children must not play with the appliance.
- Cleaning and user maintenance shall not be done by children unless they are older than 8 years and supervised.
- Children under 8 years of age must be kept away from the appliance and its power cord.
- If the power cord is damaged, have it replaced in a professional service centre in order to prevent a dangerous situation. It is forbidden to use the appliance with the power cord damaged.
- Do not immerse the appliance, power cord or plug in water or any other liquid.
- Clean surfaces that come into contact with food according to the instructions in this manual.
- This appliance is not intended for operation through an external timer switch or a remote control.

Copyright © 2026, Fast ČR, a.s.

Revision 02/2026



CAUTION: Hot surface!

The temperature of accessible surfaces may be higher if the appliance is in operation. The appliance may remain hot even after being switched off. Before cleaning, maintenance or other manipulation, make sure that the appliance is completely cooled down.

Additional Important Safety Instructions for Use of the Appliance

- Before connecting the appliance to the mains socket, make sure that the nominal voltage indicated on the appliance nameplate matches the voltage of the socket to which you want to connect the appliance.
- Connect the appliance only to a properly earthed socket. We recommend connecting the appliance to an independent electrical circuit. Do not use extension cords.
- Do not connect the appliance to a mains socket unless it is properly assembled.
- The mains socket must remain freely accessible so that the appliance can be disconnected from the power supply if necessary.
- Do not touch the power cord or plug with wet hands.
- This product is designed for household use only. It is also suitable for personal non-commercial use in spaces such as:
  - staff kitchens in stores, offices and other workplaces;
  - hotel or motel rooms and other living areas;
  - agricultural farms;
  - bed and breakfast establishments.
- Do not use the appliance in an industrial environment or outdoors.
- The appliance is designed for food preparation. Do not use it for any other purposes than those intended.
- Do not place the appliance on windowsills, sink drain trays or unstable surfaces. Always place the appliance on a stable, flat and dry surface.
- Do not place the appliance on or near an electric or gas stove, do not place it in the vicinity of naked fire or appliances that are sources of heat.
- Do not use the appliance near a bathtub, sink, swimming pool or other water source.
- Before using this appliance, check that the drip tray is located in its place.
- During operation, sufficient space for air circulation above and on all sides of the appliance should be provided. Do not use the appliance near flammable materials such as curtains, kitchen towels, etc.
- Do not place the appliance on a cloth or tablecloth surface.
- Always prepare food in the frying pot provided.
- Filling the frying pot with oil can cause a fire hazard.
- Be especially careful when preparing fatty food to avoid being burnt by spluttering fat.
- Do not touch the anti-stick coating with sharp or metallic objects. This may lead to damage.
- Do not cover the vents while the appliance is in operation.
- Always switch the appliance off and unplug it from the mains socket when left unattended, after use and before cleaning or moving.
- Allow the appliance to fully cool down before moving, cleaning or storing. Use the thermally insulated handle for carrying the appliance.
- Do not use the appliance to support various items.
- When disconnecting the power cord from the socket, always pull the plug, not the cord. Otherwise, damage to the power cord or the socket could occur.
- Make sure the power cord does not hang over the edge of a table and that it is not touching a hot surface.
- Do not use the appliance if it is not working correctly, if it was dropped on the floor, if it is damaged or has been submerged in water.
- To avoid the danger of injury by electrical shock, do not repair the appliance yourself or make any adjustments to it. All repairs should be carried out by an authorised service centre. Tampering with the appliance may result in the loss of your legal rights regarding faulty performance or warranty for quality.

EXPLANATION OF SYMBOLS PLACED ON THE PRODUCT OR IN THE ACCOMPANYING DOCUMENTATION



The product meets all the basic requirements of the applicable EU directives.



This symbol on products or original documents means that used electric or electronic products must not be added to ordinary municipal waste.

Copyright © 2026, Fast ČR, a.s.

EN Air Fryer
User Manual

- Thank you for purchasing our SENCOR product; we hope it will serve to your satisfaction.
- Prior to using this appliance, please read the user manual thoroughly, even in cases when you are already familiar with the use of similar types of appliances. Use the appliance only as described in this user manual. Keep the manual for future reference. If you pass the appliance on to another person, ensure that this user manual is included.
- Carefully unpack the appliance and make sure not to discard any part of the packaging material until you have found all its components. It is recommended to keep the original packaging, packing material, receipt and confirmation of the extent of the seller's liability or warranty certificate at least for the duration of the legal right of defective performance or quality guarantee. When transporting the appliance, we recommend packaging it again in the original box provided by the manufacturer.

DESCRIPTION OF THE APPLIANCE

A1 Control panel
A2 The fryer interior
A3 Back ventilation openings
A4 Fryer body
A5 Frying pot with a window
A6 Frying pot handle
A7 Frying mat
No picture: baking paper, two heating elements

DESCRIPTION OF THE CONTROL PANEL

B1 Preparation programme buttons
B2 ☼ button to switch on/off the illumination of the fryer interior
B3 ⏲ delayed start setting button
B4 Temperature setting buttons
B5 Numeric display (shows temperature and cooking time)
B6 °C icon
B7 Timer icon
B8 Cooking time/delayed start setting buttons
B9 ⏻ button to switch the fryer on/off
B10 ▷II button to start the fryer

PURPOSE OF USE

- The Sencor SFR 9100SS air fryer is designed for thermal preparation of food. The preparation is carried out by "frying" with hot air with a minimum amount of oil. The air is heated by two heating elements and distributed evenly through the frying pot interior with the internal fan.
- The Sencor SFR 9100SS air fryer is also equipped with a delayed start function, thanks to which you will be able to move the preparation time to the right time for you.

AIR FRYER FEATURES AND FUNCTIONS

Frying Pot

The frying pot is equipped with a sight glass that allows you to check quickly and easily the status of food preparation inside the frying pan without having to remove it.

Interior Lighting

The interior lighting makes it easy to check the cooking status. Briefly press the ☼ light button to turn the lights on and off again. When the cooking is finished, it will turn off automatically.

Air Fryer Function

The Sencor SFR 9100SS air fryer is equipped with the following cooking functions:

– **Hot air frying:** The entire frying pot is used to prepare food for the selected program.
– **Favourite food preparation program:** Save your favourite cooking program. Set the cooking time and temperature according to personal preferences and save it. For more information, please refer to "**Favourite food preparation**" chapter.
– **Delayed Start:** Set the time after which the fryer will turn on. You will find the details further in the "**Delayed Start**" chapter further in the user's manual.

BEFORE FIRST USE

- Before first use, remove the appliance and its accessories form the packaging and remove all promotional labels and tags.
- Wipe the outer surface of the fryer with a soft sponge lightly dampened with warm water. Wipe dry with a clean cloth.
- Take out the frying pot and frying mat. Wash them in warm water with a little kitchen detergent. Rinse and wipe dry.
- Wipe the inside of the fryer with a soft sponge lightly dampened with warm water. Wipe dry with a clean cloth.
- We recommend starting the air fryer for about 30 minutes at 200 °C. During this time, you may notice slight smoke or a slight smell. This is a normal occurrence which disappears with use.

FRYER PLACEMENT

- Place the hot air fryer on a flat, firm and stable surface well away from the mains socket.
- Make sure to leave a sufficient clearance around the fryer to allow proper air circulation. This is especially important in the rear part, where the ventilation openings are located. These must not be covered during operation, even if the fryer cools down.



Warning:
Do not use the appliance near flammable materials such as curtains, kitchen towels, etc. Do not place the appliance on a surface provided with a cloth or tablecloth.

BASIC USE OF THE FRYER

1. Remove the frying pot from the fryer. Put the frying mat in the frying pot.
2. Place the food you wish to cook inside and return the pot in the deep fryer. When filling the pot, observe the MAX line marked on the inside of the pot. Do not overfill the pot. When processing a larger amount of ingredients, we recommend dividing them into smaller quantities and preparing them gradually.
3. Plug the power cord into the mains socket.
4. You will hear three short audible alerts and the control panel will flash three times. It then goes out and the fryer switches to standby mode. Only the ⏻ and ☼ button will remain lit.
5. Turn on the fryer with the ⏻ button. The control panel will light up and the display will alternate between the default temperature of "180" °C and the default cooking time of "15" min.
6. Press the button of the selected cooking program and the numeric display will show the default temperature and cooking time for the selected program. The button for the selected program will start flashing. If you need to adjust the temperature, follow the instructions in the "**Temperature Setting**" section; if you need to adjust the cooking time, follow the instructions in the "**Setting the Cooking Time**" section.



Note:
More information about preset programmes can be found in the "**Preset Programmes Table**" table.

Copyright © 2026, Fast ČR, a.s.

Revision 02/2026

7. Press the ▷II button and the fryer starts. The temperature will be shown on the display and the cooking time countdown will start.
8. During cooking, check the baking status through the sight glass in the frying pot. Press the ☼ button to switch on the lighting.
9. Carefully remove the frying pot (it is not necessary to press the ▷II button), mix the food and put the pot back into the fryer body. The fryer will continue preparation.
10. As soon as the set cooking time has elapsed, "OFF" will appear on the display and the fan will run for about 30 seconds. Once the fan is switched off, the control panel will light up and the fryer will be ready for further use.
11. Remove the frying pot and check the baking status of the food. If the food is not yet fully cooked, put the frying pot back and set the desired temperature and cooking time. Start the fryer.
12. If the food is sufficiently cooked, remove the frying pot from the fryer and put it on a heat-resistant surface. Using pliers or similar kitchen utensils, remove food, allow it to drain on a plate lined with a paper kitchen towel and serve.

Note:
Do not turn the frying pot upside down. The oil that accumulates on the bottom leaks onto the prepared food.

Note:
Always place the frying pot on a heat-resistant surface. Do not place it on plastic boards, tablecloth or similar heat-sensitive materials.

13. If you need to cancel the preparation at any time, press and hold the ⏻ button.
14. After use, unplug the power cord from the mains socket.
15. Prior to cleaning, maintenance or other handling, let the fryer cool down.

Warning:
During use, the fryer is warmed up and may reach high temperatures. The fryer remains hot even after use. Mishandling may lead to serious burns. Take extra care while handling.

Note:
We recommend using protective kitchen gloves. Always use the thermally insulated handle when handling the frying pot. Do not place the frying pots on heat-sensitive surfaces, e.g. plastic boards, etc.

Note:
Never use metal utensils or knives as they may scratch anti-stick coating of the frying pot or mats.

Pausing the Cooking Process

- If you need to interrupt the fryer operation during food preparation, press the ▷II button briefly.
- The button ▷II and the button of the selected program will start flashing.
- You can use the cooking interruption to adjust the cooking time or to set a new temperature – follow the instructions below.
- You can also use the cooking interruption to check the baking status. Carefully remove the frying pot. Check the baking status, then put the frying pot back inside.
- Press the ▷II button to continue the fryer operation.
- You can also interrupt the fryer operation by carefully removing the frying pot. The operation of the fryer stops and the fan turns off. When the fryer is inserted, its operation will be restored automatically.
- If the cooking is interrupted and no button is pressed for more than 10 minutes, the fryer will turn off and go into standby mode. In such case it will be necessary to select the cooking program again and restart the fryer.

Turning Off the Fryer

If you need to turn off the fryer during operation, press the ⏻ button until the control panel goes off.

Note:
If the fryer is turned on and you do not select any program within 5 minutes, the fryer will automatically switch off and go into standby mode.

Preset Programmes Table

Mode	Icon	Default temperature (°C)	Default cooking time (min)
Chicken strips		200	28
Fish		180	23
Seafood		160	10
Pizza		180	15
French fries		200	18
Baking		160	18
Steak		180	17
Favourites			

Food making table

Food	Min–Max quantity (g)	Cooking Time (min)	Temperature (°C)
Frozen thin fries	300–500	7–10	200
Frozen thick fries	300–500	9–13	200
Frozen chicken nuggets	250–500	10–13	180
Chicken pieces	300–600	10–15	180
Prawns	200–400	5–9	160
Frozen steak	350–700	6–8	180
Pork schnitzel	250–600	8–12	180
Croissant	240–480	13–16	160
Steak	250–600	6–10	180

Temperature Setting

If you want to change the selected program temperature, proceed as follows:

1. After selecting the cooking program, press the ∧ or ∨ button next to the °F icon repeatedly and set the temperature between 40 and 200 °C. Each press increases/decreases the temperature by 5 °C.
2. Press and hold the ∧ or ∨ button to speed up the temperature setting.
3. Press the ▷II button to start the fryer.

Setting the Cooking Time

If you need to adjust the cooking time of the selected program, proceed as follows:

1. After selecting the cooking program, press the ∧ or ∨ button repeatedly by the ⏱ icon and set the cooking time in the range from

01 to 60 minutes. Each press increases/decreases the cooking time by 1 minute.
2. If you press and hold the ∧ or ∨ button, you will speed up the time setting.
3. Press the ▷II button to start the fryer.

Favourites settings

This program allows you to save your favourite temperature and cooking time settings to memory. Follow these steps to save:
1. Turn on the fryer with the ⏻ button.
2. Press the ★ button and it will flash.
3. To set the temperature, press the ∧ or ∨ button repeatedly and set the temperature between 40 and 200 °C. Each press increases/decreases the temperature by 5 °C. Press and hold the ∧ or ∨ button to speed up the time setting.
4. To set the cooking time, press the ∧ or ∨ button repeatedly and set the cooking time between 01 and 60 minutes. Each press increases/decreases the cooking time by 1 minute. If you press and hold the ∧ or ∨ button, you will speed up the time setting.
5. Press and hold the ★ button for about 3 seconds until a short beep sounds. This indicates that the setting has been saved.
6. Press the ▷II button to start the fryer.

Note:
If you skip step 5, the setting will not be saved.

7. To start the favourite program, press the ★ button after turning on the fryer, then press the ▷II button.

Delayed Start

The delayed start setting allows you to set the time after which it will turn on automatically. This will allow you to prepare the food at the desired time.
1. Turn on the fryer with the ⏻ button, then select cooking program. Adjust the cooking time or temperature.
2. Press the ⏲ button and the display will show the default delayed start time "0.5H". The ⏲ button and the button for the selected program will flash.
3. Use the ∧ or ∨ buttons next to the 🕒 icon to set the delayed start time. You can set the time from 0,5 to 12 hours. From 0,5 to 10 hours you set in steps of half an hour, from 10 to 12 you set in steps of one hour.
4. Press the ▷II button to start the fryer. The ⏲, ▷II, ⏻ buttons and the selected program icon remain lit on the control panel. The display will count down the set time.
5. When the set time has elapsed, the fryer will start automatically.

If you press the ▷II button during the countdown and then the ⏲ button, the countdown will be cancelled but the fryer will not turn on. It will be necessary to select a cooking program and turn it on.
If you press the ⏻ button during the countdown, the countdown will be cancelled, the fryer switches off and switches to standby mode.

Warning:
Please note that during the delayed start period the ingredients are left at room temperature which could lead to deterioration of the ingredients (especially meat, fish or seafood) if the delayed start-period was set to too long.

Internal Lighting

The air fryer is equipped with lighting of the inside of the frying pot. After starting the fryer, the lighting will remain on for approximately 4 minutes and then goes out. If you need to turn on the lighting, press the 💡 button. To switch off the lighting, press the 💡 button again.

TIPS AND ADVICE

- Only prepare food of the same size simultaneously. Smaller pieces of food usually require a slightly shorter preparation time than larger ones.
- Adjust the cooking time depending on the amount of food being cooked. A larger amount requires a longer preparation time than a smaller amount.
- Stir the food during preparation (especially smaller pieces). This will achieve an optimal result and an even browning.
- Add a little oil to the fresh potato chips and fry until crispy.
- The optimal amount for making crispy chips is 0.5kg.
- Do not prepare foods with a very high fat content, such as sausages, in hot air fryers.
- Food usually prepared in the oven can also be prepared in the air fryer.
- When preparing dishes from pre-prepared dough, shorten the preparation time.
- The air fryer can also be used to heat food. To heat the food, set the temperature to 150 °C with the cooking time of 10 minutes.

RECIPES

Homemade French Fries

To prepare homemade French fries, follow the steps below:
- Peel and slice the potatoes into fries.
- Wash the fries thoroughly and dry them with a paper kitchen towel.
- Put 1 to 2 tablespoons of olive oil in a bowl, add the fries and stir well until all the fries are coated with oil.
- Remove the fries from the tray and allow them to drain through the sieve.
- Place the drained fries in the frying pot and select the frying programme.

Meatballs with Beer

Ingredients for 4 servings:
400 g minced beef
20 g mushrooms
40 g red onion
30 g bacon
2 cloves of garlic
26 g red peppers
1 sprig of rosemary
1 sprig of thyme
1 egg yolk
Salt
Ground black pepper
Chilli spices
A pinch of hot paprika
3 g sweet paprika ground
10 g of pork lard

Procedure
- Cut the English bacon into small cubes, as well as mushrooms, peppers, onions, add garlic cut into small slices and fry everything in a pan, where we add finely chopped rosemary and thyme leaves. Put the mixture aside and let it cool down.
- Meanwhile, put the minced meat, all the spices, egg yolk, pork lard and already cooled prepared mixture into the bowl. Thoroughly mix everything together.
- From the meat prepared in this way, prepare balls weighing approximately 20 g.
- Put the meatballs prepared in this way in the frying pot. Set the temperature to 180 °C and the cooking time to 8–15 minutes depending on their size.

Tip: For a nice smooth surface of the balls, we recommend wetting your hands, the meat mixture will not stick to your hands.

Copyright © 2026, Fast ČR, a.s.

Stuffed Chicken Breast

Ingredients for 4–6 servings:
150 g chicken breast
130 g bacon (sliced)
25 g onion
45 g shallots
2 cloves of garlic
20 g fresh spinach leaves
10 g lard
5 g plain flour
2 eggs (M)
Salt
Ground black pepper
½ l chicken broth

Procedure

- Cut 20 g of bacon into cubes and lightly fry, add finely chopped shallots, sliced garlic and fry everything briefly. Then add the spinach, which is also lightly fried, salt and pepper. Once the spinach leaves are fried, add the scrambled eggs and let them harden. We set aside the prepared mixture to allow it to cool down. Meanwhile, prepare the chicken breast before the mixture gets cold.
- Dry the chicken breast and in the place where it is strongest, make a pocket down to the narrow part, be careful not to cut it. Add salt and pepper to the chicken breast prepared in this way and fill with the mixture prepared in advance. Join the cut with one toothpick to prevent the mixture from falling out of the pocket.
- Wrap the chicken breast in the remaining English bacon.
- Put in the frying pot. Set the temperature to 170 °C and the cooking time to 45 minutes.
- In a saucepan, prepare a darker onion roux (sauté onions in lard until golden brown, then add flour), and then cook it thoroughly. Season as needed.
- Serve with potatoes or rice.

CLEANING AND MAINTENANCE

Clean the fryer after each use. Before cleaning, the fryer must be switched off, disconnected from the mains socket and completely cooled, including accessories.



Warning:
To prevent the risk of electric shock, do not immerse the appliance, power cable, or plug into water or any other liquid.

Frying container with mat

Remove the mat from the frying container. Wash the frying container and mat in warm water with a little neutral kitchen detergent. Use a soft sponge. Rinse and wipe dry.
If the food gets toasted, pour hot water in the pot and add kitchen detergent. Leave on for about 10 minutes and then cleanse.
The frying pot and mat can be washed in the dishwasher. The washing programme temperature should not exceed 65 °C. Do not wash the frying basket or the trivet in the dishwasher if the surface coating that comes into contact with food is impaired or damaged. This could result in further damage or corrosion.

Internal Space

Wipe the interior after removing the frying pot with a soft sponge slightly dampened in warm water. Carefully wipe the heating element. Wipe dry with a clean cloth.

External Surface

To clean the exterior surface, use dry or slightly dampened cloth. Then thoroughly wipe until dry.



Warning:
Never use wire cloths, abrasive cleaners, petrol, etc. for cleaning.

Error Code

- If an error code E1, E2 or E3 appears on the display, turn the deep fryer off, disconnect it from the power source and wait a moment before connecting it back in to the power source and turning it on.
- If any of the error code displays persist, please contact an authorised service centre.

STORAGE

- If the appliance will not be used for an extended period, unplug it from the power socket, let it cool down, and clean it following the instructions provided above.
- Before storing, ensure that the appliance and all accessories are thoroughly clean and dry.
- Store the appliance in a dry, clean, and well-ventilated place away from extreme temperatures and out of the reach of children or pets.

TECHNICAL SPECIFICATIONS

Rated voltage range ..... 220–240 V~
Rated frequency ..... 50/60 Hz
Rated input ..... 2,000 W
Volume of frying container ..... 9 l
Temperature setting ..... 40–200 °C
Setting the operating time ..... 1–60 minutes

We reserve the right to change the text and technical specifications.

Values Provided according to Commission Regulation EU 2023/826

Off Mode	
Power consumption in off mode	–
Time needed for the equipment to automatically reach off mode	–
Standby Mode	
Power consumption in Standby mode	0.5 W
Time needed for the equipment to automatically reach standby mode	0 min
Networked Standby Mode (Wi-Fi)	
Power consumption in networked standby	–
Time needed for the equipment to automatically reach networked standby mode	–

ORIGINAL CONSUMABLE ACCESSORIES

SFRXD 0007	Frying pot
SFRXD 0008	Frying mat
SFRX 0001	Baking paper

Copyright © 2026, Fast ČR, a.s.

INSTRUCTIONS AND INFORMATION ON DISPOSAL OF USED PACKAGING MATERIAL

Dispose of used packaging material at the location designated by the municipality for waste disposal.

DISPOSAL OF USED ELECTRICAL AND ELECTRONIC EQUIPMENT

Used electrical and electronic products must not be added to ordinary municipal waste. For proper disposal and recycling of these products, deliver them to designated collection points. Alternatively, in some European Union states or other European countries the products can be returned to the local retailer when buying an equivalent new product. By properly disposing of this product, you help preserve valuable natural resources and contribute to preventing potential negative impacts on the environment and human health resulting from improper waste disposal. For more details, contact your local authority or nearest collection point. Fines may be imposed for improper disposal of this type of waste as per national regulations.

For Business Entities in European Union States

To dispose of electric or electronic equipment, request necessary information from your retailer or supplier.

Disposal in Other Countries Outside the European Union

To dispose of this product elsewhere, request necessary information on the correct disposal method from local authorities or your retailer.

Copyright © 2026, Fast ČR, a.s.

FAST ČR, a.s.
U Sanitasu 1621
CZ-251 01 Říčany
www.sencor.com
info@sencor.cz

tehnoteka

https://cenoteka.rs

Ovaj dokument je originalno proizveden i objavljen od strane proizvođača, brenda Sencor, i preuzet je sa njihove zvanične stranice. S obzirom na ovu činjenicu, Cenoteka ističe da ne preuzima odgovornost za tačnost, celovitost ili pouzdanost informacija, podataka, mišljenja, saveta ili izjava sadržanih u ovom dokumentu.

Napominjemo da Cenoteka nema ovlašćenje da izvrši bilo kakve izmene ili dopune na ovom dokumentu, stoga nismo odgovorni za eventualne greške, propuste ili netačnosti koje se mogu naći unutar njega. Cenoteka ne odgovara za štetu nanesenu korisnicima pri upotrebi netačnih podataka. Ukoliko imate dodatna pitanja o proizvodu, ljubazno vas molimo da kontaktirate direktno proizvođača kako biste dobili sve detaljne informacije.

Za najnovije informacije o ceni, dostupnim akcijama i tehničkim karakteristikama proizvoda koji se pominje u ovom dokumentu, molimo posetite našu stranicu klikom na sledeći link:

https://cenoteka.rs/p/sencor-friteza-na-vruc-vazduh-sfr-9100ss/