tehnoteka

https://cenoteka.rs

Informacije o proizvodu (EN)

CATA ugradna ploča INSB 8021 BK



Cenoteka je online destinacija za upoređivanje cena i karakteristika bele tehnike, potrošačke elektronike i IT uređaja kod trgovinskih lanaca i internet prodavnica u Srbiji. Naša stranica vam omogućava da istražite najnovije informacije, detaljne karakteristike i konkurentne cene proizvoda.

Posetite nas i uživajte u ekskluzivnom iskustvu pametne kupovine klikom na link:

https://cenoteka.rs/p/cata-ugradna-ploca-insb-8021-bk/

INDUCTION **HOBS**

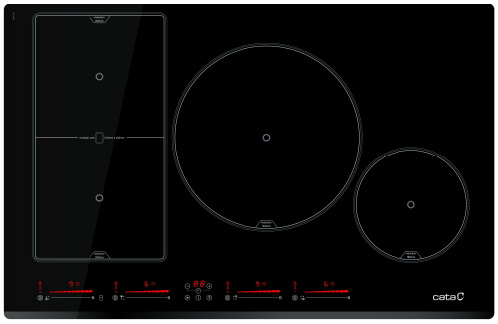

INSB 8021 BK

Cod. **08081401** EAN **8422248109536**

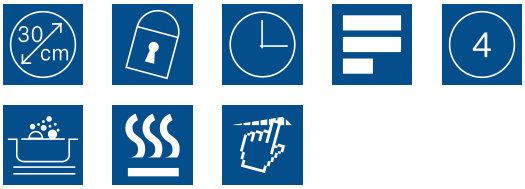

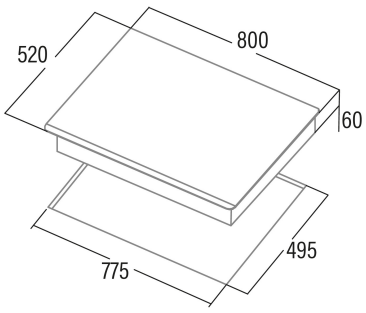

GENERAL INFORMATION

EAN/UPC	8422248109536
Subfamily	Induction

Product sheet

Number of cooking zones	4
Zone 1: Technology	Induction
Zone 1: Type of zone	Rectangular Flexible
Zone 1: Position	Front Left
Zone 1: Zone diameter (mm)	21x20
Zone 1: Power (kW)	1,5
Zone 1: Booster (kW)	2
Zone 1: Consumption (Wh / kg)	182,9
Zone 1B: Zone diameter (mm)	N/A
Zone 1C: Zone diameter (mm)	N/A
Zone 2: Technology	Induction
Zone 2: Type of zone	Rectangular Flexible
Zone 2: Position	Rear Left
Zone 2: Zone diameter (mm)	21x20
Zone 2: Power (kW)	2
Zone 2: Booster (kW)	2,8
Zone 2: Consumption (Wh / kg)	182,7
Zone 2B: Zone diameter (mm)	N/A
Zone 2C: Zone diameter (mm)	N/A
Zone 3: Technology	Induction
Zone 3: Type of zone	Simple
Zone 3: Position	Centre
Zone 3: Zone diameter (mm)	30
Zone 3: Power (kW)	2,3
Zone 3: Booster (kW)	3
Zone 3: Consumption (Wh / kg)	216,3
Zone 3B: Zone diameter (mm)	N/A
Zone 3C: Zone diameter (mm)	N/A
Zone 4: Technology	Induction
Zone 4: Type of zone	Simple
Zone 4: Position	Front Right
Zone 4: Zone diameter (mm)	18
Zone 4: Power (kW)	1,2
Zone 4: Booster (kW)	1,5
Zone 4: Consumption (Wh / kg)	179,5
Zone 4B: Zone diameter (mm)	N/A
Zone 4C: Zone diameter (mm)	N/A
Zone 5: Technology	N/A
Zone 5: Type of zone	N/A
Zone 5: Position	N/A
Zone 5: Zone diameter (mm)	N/A
Zone 5B: Zone diameter (mm)	N/A
Zone 5C: Zone diameter (mm)	N/A
Zone 6: Technology	N/A
Zone 6: Type of zone	N/A
Zone 6: Position	N/A
Zone 6: Zone diameter (mm)	N/A
Zone 6B: Zone diameter (mm)	N/A
Zone 6C: Zone diameter (mm)	N/A

Dimensions

Width (mm)	800
Height (mm)	60
Depth (mm)	520
Built-in width (mm)	775
Built-in height (mm)	56
Built-in depth (mm)	495

Easy installation system	Quick Fix

Finishing

Material	Glass
Bevel	Front
Frame	No
Cooking supports	N/A

Control

Control type	Slider Touch Control
Control position	Front Centre
Independent zone control	√
Hidden control	-
Power levels	9 + Booster
Knob type	N/A
Cooking time programming	√
Countdown alarm	√
Power management	-
Available power limits (kW)	2,8/3,5
Connectivity	Pro
Autoignition	N/A

Safety

Safety lock	√
Child lock	Yes (Key)
Residual heat indicator	√
Automatic cookware detection	√
Smart cookware detection	-
Automatic safety shutdown	√
Liquid spill detection	√
Safety valve	-

Electrical connection

Nominal voltage (V)	220-240
Nominal frequency (Hz)	50/60
Nominal input power (W)	7,2
Multiphase connection option	2 phases
Electric shock protection	Class I
Power cord length (m)	1
Plug type	No plug

Accessories

Barbecue grill	3017400

tehnoteka

https://cenoteka.rs

Ovaj dokument je originalno proizveden i objavljen od strane proizvođača, brenda CATA, i preuzet je sa njihove zvanične stranice. S obzirom na ovu činjenicu, Cenoteka ističe da ne preuzima odgovornost za tačnost, celovitost ili pouzdanost informacija, podataka, mišljenja, saveta ili izjava sadržanih u ovom dokumentu.

Napominjemo da Cenoteka nema ovlašćenje da izvrši bilo kakve izmene ili dopune na ovom dokumentu, stoga nismo odgovorni za eventualne greške, propuste ili netačnosti koje se mogu naći unutar njega. Cenoteka ne odgovara za štetu nanesenu korisnicima pri upotrebi netačnih podataka. Ukoliko imate dodatna pitanja o proizvodu, ljubazno vas molimo da kontaktirate direktno proizvođača kako biste dobili sve detaljne informacije.

Za najnovije informacije o ceni, dostupnim akcijama i tehničkim karakteristikama proizvoda koji se pominje u ovom dokumentu, molimo posetite našu stranicu klikom na sledeći link:

https://cenoteka.rs/p/cata-ugradna-ploca-insb-8021-bk/