tehnoteka

https://tehnoteka.rs

Uputstvo za upotrebu (EN)

LIEBHERR ugradna vinska vitrina UWgbi 3682

LIEBHERR



Tehnoteka je online destinacija za upoređivanje cena i karakteristika bele tehnike, potrošačke elektronike i IT uređaja kod trgovinskih lanaca i internet prodavnica u Srbiji. Naša stranica vam omogućava da istražite najnovije informacije, detaljne karakteristike i konkurentne cene proizvoda.

Posetite nas i uživajte u ekskluzivnom iskustvu pametne kupovine klikom na link:

https://tehnoteka.rs/p/liebherr-ugradna-vinska-vitrina-uwgbi-3682-akcija-cena/

User Guide

Quality, Design and Innovation

home.liebherr.com/fridge-manuals

LIEBHERR

Contents

1 Safety information and warnings..... 3
1.1 Intended use..... 3
1.2 Climate classes..... 3
1.3 User group..... 3
1.4 Installation and commissioning..... 3
1.5 Safe handling of the appliance..... 3
1.6 Cleaning..... 3
1.7 Faults, damage and repairs..... 3
1.8 Disposal..... 4
1.9 Conformity..... 4
1.10 SVHC substances in accordance with the REACH Regulation..... 4
1.11 EPREL database..... 4
1.12 Open source licences..... 4
1.13 Spare parts..... 4
1.14 Symbols on the appliance..... 4
1.15 Warning levels..... 4

2 Appliance at a glance..... 5
2.1 Scope of delivery..... 5
2.2 Overview of the appliance and equipment..... 5
2.3 SmartDevice..... 5

3 Functionality of the Touch & Swipe display..... 6
3.1 Navigation and symbol explanation..... 6
3.2 Menus..... 6
3.3 Sleep mode..... 6

4 Putting into operation..... 6
4.1 Switching on appliance (first use)..... 6

5 Storage..... 7
5.1 Information regarding storage..... 7
5.2 Storage sketch..... 7

6 Saving energy..... 8

7 Controls..... 8
7.1 Control and display elements..... 8
7.1.1 Status display..... 8
7.1.2 Display symbols..... 8
7.1.3 Acoustic signals..... 9
7.2 Appliance functions..... 9
7.2.1 Notes on the appliance functions..... 9
7.2.2 Switching appliance on and off..... 9
7.2.3 WiFi..... 9
7.2.4 Temperature..... 10
7.2.5 Temperature unit..... 11
7.2.6 SabbathMode..... 11
7.2.7 HumiditySelect..... 12
7.2.8 Presentation light *..... 12
7.2.9 Display brightness..... 12
7.2.10 Door alarm..... 13
7.2.11 Light alarm..... 13
7.2.12 Alarm tone..... 13
7.2.13 Key tone..... 14
7.2.14 Display lock..... 14
7.2.15 Access codes..... 15
7.2.16 Language..... 16
7.2.17 Appliance and software information..... 16
7.2.18 Reminder..... 16
7.2.19 Demo mode..... 16
7.2.20 Resetting to factory settings..... 17
7.3 Message..... 17
7.3.1 Warnings..... 17
7.3.2 Reminders..... 18

8 Features..... 19
8.1 Safety lock..... 19
8.2 TipOpen..... 19
8.3 Wooden grid..... 20
8.4 Labels..... 21

9 Maintenance..... 21
9.1 FreshAir activated carbon filter..... 21
9.2 Cleaning the appliance..... 22

10 Customer help..... 22
10.1 Technical specifications..... 22
10.2 Operating noises..... 22
10.3 Technical fault..... 23
10.4 Customer Service..... 24
10.5 Model plate..... 24

11 Shutting down..... 24

12 Disposal..... 24
12.1 Preparing the appliance for disposal..... 24
12.2 Disposing of the appliance in an environmentally friendly manner..... 24

The manufacturer is continually working on the further development of all types and models. Please be aware that we reserve the right to make changes to the shape, equipment and technology.

Symbol	Explanation
	**Read instructions** Please read the information in these instructions carefully to understand all of the benefits of your new appliance.
	**Additional information on the Internet** The digital manual with additional information and in other languages can be found via the QR code on the front of the manual or by entering the service number at **home.liebherr.com/fridge-manuals**. The service number can be found on the serial tag: 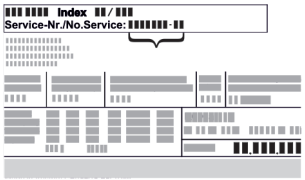 *Fig.* Example illustration
	**Check appliance** Check all parts for transport damage. If you have any complaints, please contact your agent or customer service.
	**Differences** These instructions apply to a range of models, so differences are possible. Sections that apply to certain models only are marked with an asterisk (*).
	**Instructions and results** Instructions are marked with a ▶. Results are marked with a ▷.
	**Videos** Videos about the appliances are available on the YouTube channels of Liebherr-Hausgeräte.

Open source licences:

The appliance contains software components that use open source licences. Information on the open source licences used can be found here: **home.liebherr.com/open-source-licences**

These operating instructions apply to:

UWpri	3661 3662 3672 3761 3762 3782
UWgbi	3682 3782

1 Safety information and warnings

Keep this user information in a safe place so that you can refer to it at any time.

If you pass on the appliance, pass this user information on to subsequent owners.

To use the appliance properly and safely, read this user information carefully before installation and use. Always follow the instructions, safety instructions and warnings contained therein. They are important so that you can install and operate the appliance safely and properly.

1.1 Intended use

This appliance is intended for household use and similar applications such as:

- in staff kitchen areas in shops, offices and other work areas
- in agricultural environments and by guests in hotels, motels and other accommodation
- in bed and breakfasts
- in catering and similar wholesale operations

Further uses:

- This appliance is intended exclusively for storing wine.
- This appliance is not suitable for freezing food.
- This appliance is suitable for integrated under-counter installation.

All other types of application are impermissible.

1.2 Climate classes

Depending on its climate class, the appliance is designed for operation within certain ambient temperature limits. The climate class for your appliance is printed on the type plate.

Note

▶ In order to guarantee fault-free operation comply with the specified ambient temperatures.

Climate class	for ambient temperatures from
SN	10 °C to 32 °C
N	16 °C to 32 °C
ST	16 °C to 38 °C
T	16 °C to 43 °C
SN-ST	10 °C to 38 °C
SN-T	10 °C to 43 °C

1.3 User group

- This appliance can be used by children aged from 8 years and above and persons with reduced physical, sensory or mental capabilities or lack of experience and knowledge if they have been given supervision or instruction concerning use of the appliance in a safe way and understand the hazards involved.
- Children must not play with the appliance.
- Children must not carry out cleaning and user maintenance without supervision.

1.4 Installation and commissioning

- Only install and connect the appliance in accordance with the instructions in the user information.
- Install the appliance according to the instructions in the user information to prevent the appliance from tipping over.
- Do not close the ventilation openings in the appliance housing or in the installation housing.
- Do not damage the mains cable. The appliance must not be operated with a defective mains cable.
- Do not place portable multiple sockets or power supply units at the rear of the appliance.
- It must be easy to access the socket so that the appliance can be quickly disconnected from the power supply in case of an emergency. It must not be behind the appliance.

1.5 Safe handling of the appliance

- Do not store any explosive substances, such as aerosol containers with flammable propellant gas, in the appliance. These types of aerosol can be identified by the list of contents printed on it, or by a flame symbol. Any leaking gas may ignite due to electrical parts.
- Keep burning candles, lamps and other objects with naked flames away from the appliance, so that these do not set fire to the appliance.
- Alcoholic beverages and other containers bearing alcohol must be sealed tight for storage. Any leaking alcohol may ignite due to electrical parts.
- Avoid prolonged skin contact with cold surfaces or with cold/frozen food. Use gloves for protection, for example.
- The refrigerant contained (information on the type plate) is environmentally friendly but flammable. Leaking refrigerant may ignite.
  - Do not damage the refrigeration circuit.
  - Do not use any ignition sources inside the appliance.
  - Do not use electrical appliances inside the appliance (e.g. steam cleaners, heaters).
  - If the refrigerant leaks: remove any naked flames or ignition sources from the vicinity of the leakage point. Properly air the room. Inform customer service.
- Only open the door for a short time. This prevents the temperature inside the appliance from rising.
- Do not reach between the door and the appliance when opening and closing. Fingers may become trapped.
- The temperature in the warmest part of the appliance may be higher than the set temperature.

1.6 Cleaning

- Regularly clean surfaces that come into contact with food.
- Clean the defrost water drain regularly.
- Do not use an electric heater or steam cleaner, naked flames or defrost spray to speed up the defrosting process.
- Do not remove the ice with sharp objects.

1.7 Faults, damage and repairs

- If the mains connection cable of the appliance is damaged, replace the mains connection cable.

- Repairs and interventions on the appliance may only be carried out by the customer service or by other qualified personnel trained for this purpose.
- In the event of malfunctions and appliance faults, pull out the mains plug or switch off the fuse. Always hold the plug when pulling out the mains plug. Never tug on the cable.

1.8 Disposal

- The appliance contains valuable materials and is marked with the appropriate symbol. (see 1.14 Symbols on the appliance)
  - Do not dispose of the appliance in the household waste.
  - Dispose of the appliance free of charge at your local recycling centre using the Class 1 collection containers.
  - When purchasing a new appliance, return the old appliance to the retailer free of charge.
  - Provide information about return options.
- If the appliance contains lamps that you can remove yourself without damaging them:
  - Remove lamps before disposal.
  - Dispose of lamps via the appropriate collection systems.
- Your appliance may contain personal data.
  - Delete personal data before disposal.
- The appliance contains refrigerant (information on the type plate) and oil. The refrigerant inside the appliance is environmentally friendly, but flammable. The oil it contains is also flammable. Escaping refrigerant and oil can ignite in high concentrations and in contact with an external heat source.
  - Do not damage the refrigeration circuit.
  - Only dispose of the appliance in accordance with the instructions in the user information.

1.9 Conformity

The coolant circuit has been tested for leak-tightness. When installed, the appliance complies with the relevant safety regulations and directives.

For the EU market:*	The appliance complies with Directive 2014/53/EU.*
For GB market:*	The appliance complies with the Radio Equipment Regulations 2017 SI 2017 No. 1206.*

The full text of the EU Declaration of Conformity is available at the following web address: www.liebherr.com

1.10 SVHC substances in accordance with the REACH Regulation

You can use the following link to check whether your appliance contains SVHC substances in accordance with the REACH Regulation:

home.liebherr.com/en/en/liebherr-experience/sustainability/environment/scip/scip.html

1.11 EPREL database

From 1 March 2021, the information on energy labelling and eco-design requirements will be available in the European product database (EPREL). The product database can be accessed via the following link https://eprel.ec.europa.eu/. Here, you are asked to enter the model identifier. You will find the model identifier on the type plate.

1.12 Open source licences

The appliance contains software components that use open source licences. Information on the open source licences used can be found here:

home.liebherr.com/open-source-licences

1.13 Spare parts

The spare parts availability for functional parts and stockable parts of the equipment is 15 years.

1.14 Symbols on the appliance

	This symbol may be found on the compressor. It pertains to the oil in the compressor and indicates the following danger: Can be fatal if swallowed or with penetration of the respiratory tract. This information is only significant for recycling. No risk exists with normal use. Do not remove this symbol.
	Warning: Fire hazard due to flammable substances. This symbol is located on the compressor and can also be found in other places on the appliance. This symbol warns of flammable substances. Do not remove this symbol.
	This or a similar symbol may be on the rear of the appliance. It indicates that there are vacuum insulation panels (VIP) or perlite panels in the door and/or housing. This information is only significant for recycling. Do not remove this symbol.
	This symbol is located on the type plate. It indicates that the appliance contains valuable materials and that you must not dispose of it with household waste. (see 1.8 Disposal)

1.15 Warning levels

DANGER	Identifies an immediately dangerous situation that will result in death or serious bodily injuries if it is not prevented.
WARNING	Identifies a dangerous situation that could result in death or serious bodily injury if it is not prevented.
CAUTION	Identifies an immediately dangerous situation that could result in slight or moderate injuries if it is not prevented.
ATTENTION	Identifies a hazardous situation that could result in property damage if it is not prevented.
Note	Identifies useful information and tips.

*** Depending on model and options**

2 Appliance at a glance

2.1 Scope of delivery

Check all parts for transport damage. Contact your dealer or customer service in the event of complaints. (see 10.4 Customer Service)

Your new appliance comes with the following parts:

- Built-in appliance
- Features (depending on the model)
- Installation materials (depending on the model)
- “Quick Start Guide”
- Service Brochure

2.2 Overview of the appliance and equipment

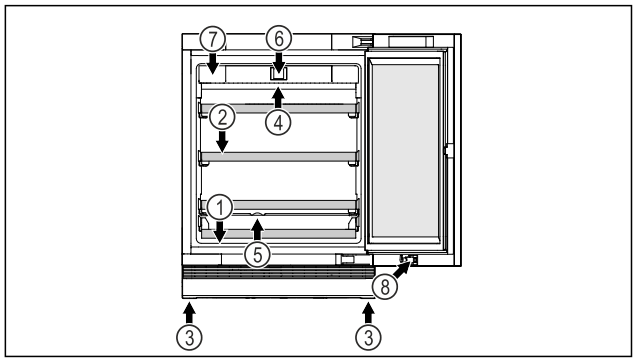

Fig. 1 Example illustration, front end

Equipment

(1) Type plate
(2) Shelves
(3) Adjustable foot
(4) Interior lighting*
(5) Condensation drainage
(6) Controls and temperature display
(7) FreshAir activated carbon filter
(8) Lock*

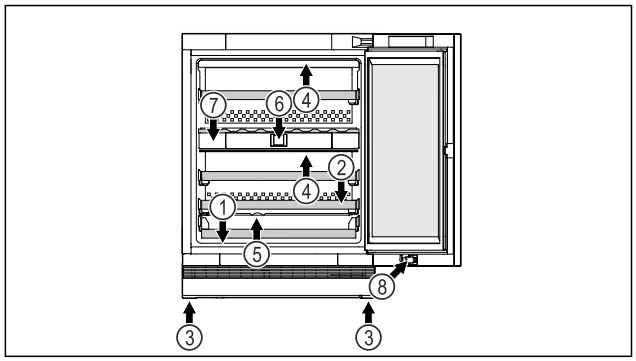

Fig. 2 Example illustration, front end

Equipment

(1) Type plate
(2) Shelves
(3) Adjustable foot
(4) Interior lighting*
(5) Condensation drainage
(6) Controls and temperature display
(7) FreshAir activated carbon filter
(8) Lock*

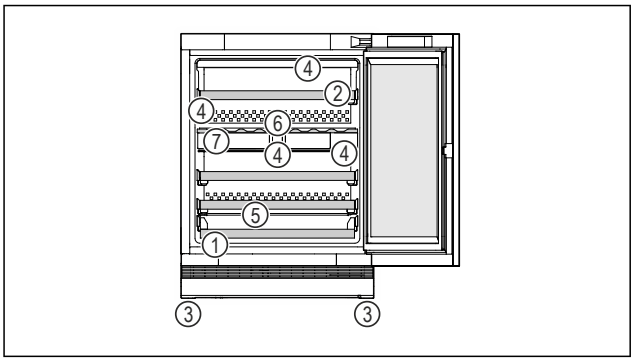

Fig. 3 Example illustration, front end

Equipment

(1) Type plate
(2) Shelves
(3) Adjustable foot
(4) Interior lighting*
(5) Condensation drainage
(6) Controls and temperature display
(7) FreshAir activated carbon filter

2.3 SmartDevice

SmartDevice is the networking solution for your wine storage cabinet.

If your appliance SmartDevice-enabled or compatible, you can quickly and easily connect your appliance to your WiFi. With the SmartDevice app, you can operate your appliance from a mobile device. Additional functions and setting options are available in the SmartDevice SmartDevice app.

SmartDevice-enabled appliance:*	Your appliance is capable of being a SmartDevice. To be able to connect your device to WiFi, you need to download the SmartDevice app.*
SmartDevice-compatible appliance:*	Your appliance is compatible for use with the SmartDeviceBox. You must first purchase and install the SmartDeviceBox. In order to connect your appliance to the WiFi, you need to download the SmartDevice app.*
More information about SmartDevice:	**smartdevice.liebherr.com**
Purchasing the SmartDeviceBox in the Liebherr-Hausgeräte store:*	**home.liebherr.com/shop/de/deu/smartdevicebox.html***
Downloading the SmartDevice app:	
	After installing and configuring the SmartDevice app, you can connect your appliance to your Wi-Fi (see 7.2.3 WiFi) using the SmartDevice app and the appliance's Wi-Fi function.

Note
The SmartDevice function is not available in the following countries: Russia, Belarus, Kazakhstan.

You cannot use the SmartDeviceBox.*

*** Depending on model and options**

3 Functionality of the Touch & Swipe display

You operate your appliance using the Touch & Swipe display. You select appliance functions in the Touch & Swipe display (hereafter referred to as display) by tapping them. If you do not perform any action on the display for 10 seconds, the display either jumps back to the higher-level menu or directly to the status display.

3.1 Navigation and symbol explanation

In the illustrations, different symbols are used to navigate the display. The following table describes these symbols.

Symbol	Description
	**Briefly touch the display:** Activates/deactivates function. Confirms selection. Opens submenu.
	**Touch the display for a specified time (e.g. 3 seconds):** Activates/deactivates function or value.
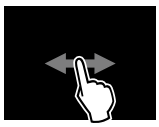	**Swipe left or right:** Navigate in the menu.
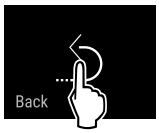	**Briefly touch the Back symbol:** Jumps back one menu level.
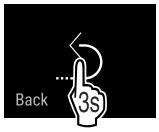	**Press and hold the Back symbol for 3 seconds:** Jumps back to the status display.
	**Briefly touch the Back symbol at the top left:** Jumps back one menu level.
	**Arrow with clock:** It takes more than 10 seconds for the following message to appear in the display.
	**Arrow with a time indication:** It takes the specified amount of time until the following message appears in the display.
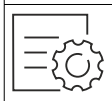	**“Open Settings menu” symbol:** Navigates to the Settings menu and opens the settings menu. If necessary: Navigate to the desired function in the Settings menu. (see 3.2.1 Opening the Settings menu)
No action for 10 seconds	If you do not perform any action on the display for 10 seconds, the display either jumps back to the higher-level menu or directly to the status display.
Close the door and open it again.	If you close the door and immediately open it again, the display jumps directly back to the status display.

Note: Illustrations of the display are shown in the English version.

3.2 Menus

The appliance functions are distributed over various menus:

Menu	Description
Main menu	When you switch the appliance on, you are automatically in the main menu. From here you can navigate to the most important appliance functions, to the Settings menu and to the Advanced menu.
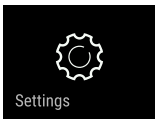 Settings menu	The Settings menu contains additional appliance functions for setting up your appliance.

3.2.1 Opening the Settings menu

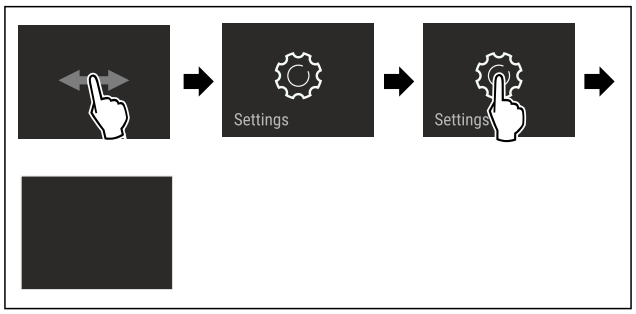

Fig. 4 Example illustration

▶ Carry out action steps according to the illustration.
▷ Settings menu is open.
▶ If necessary: Navigate to the desired function.

3.3 Sleep mode

If you do not touch the display for 1 minute, the display switches to sleep mode. In sleep mode, the display brightness is dimmed.

3.3.1 Ending sleep mode

▶ Touch the display briefly with your finger.
▷ Sleep mode is ended.

4 Putting into operation

4.1 Switching on appliance (first use)

Ensure that the following requirements are met:

- Appliance is installed and connected.
- All adhesive strips, adhesive and protective films and transport locks are removed from inside and outside the appliance.

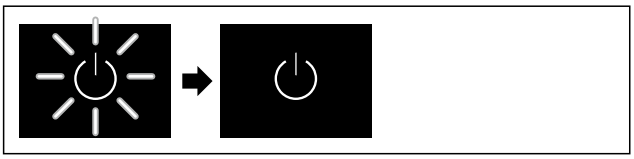

Fig. 5 Example illustration

▶ The standby symbol is flashing: Wait until the start process is complete.
▷ The display shows the standby symbol.

If the appliance is delivered with factory settings, the screen language must first be set during commissioning.

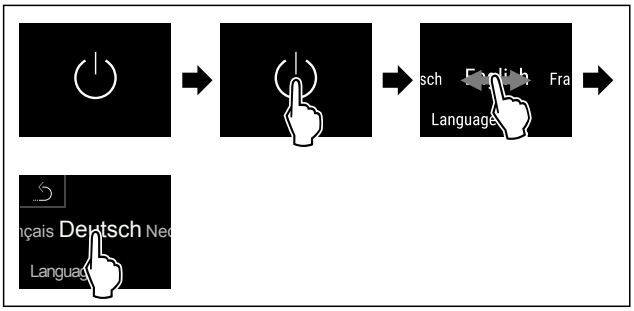

Fig. 6

▶ Carry out action steps according to the illustration.
▷ Language is set.

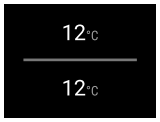

Fig. 8 Status display

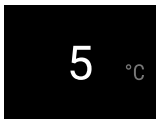

Fig. 8 Status display

▷ The appliance is ready for operation once the temperature appears in the display.
▷ The temperature display flashes until the set temperature is reached.

5 Storage

5.1 Information regarding storage

WARNING
Fire hazard from electrical appliances!
If you use electrical appliances in the food area of your appliance, they can cause a fire.
▶ Do not use electrical appliances in the food area of the appliance unless recommended by the manufacturer.

Note
The energy consumption increases and the cooling power goes down if ventilation is not sufficient.
▶ Always keep air slots clear.

Observe the following specifications for storage:
- Keep the air vents on the fan free.

5.2 Storage sketch

5.2.1 UWpri 3761

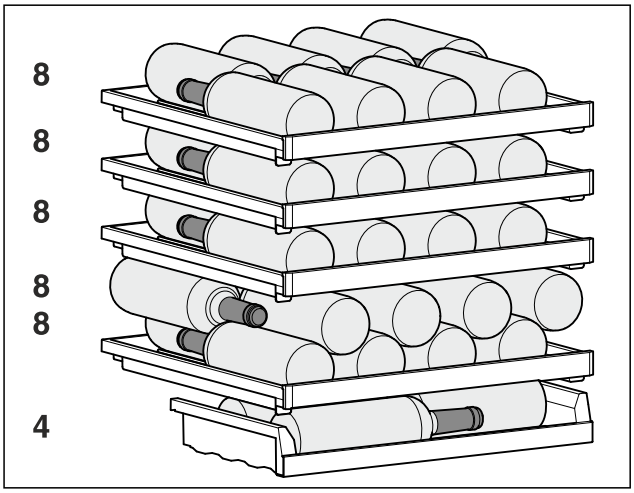

Fig. 9 Total 44 bottles (0.75 l Bordeaux bottles as per standard NF H 35-124)

5.2.2 UWpri 3661

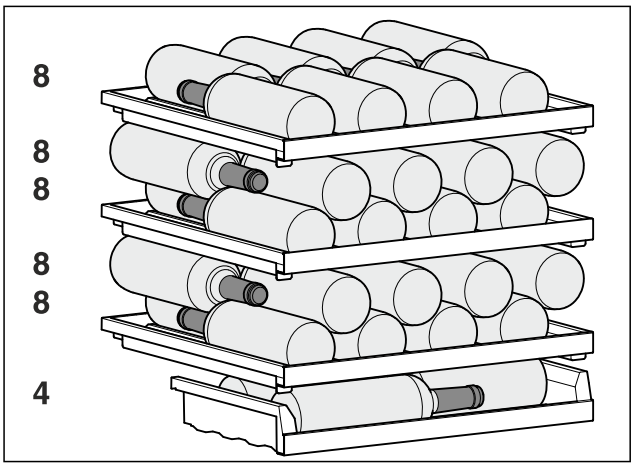

Fig. 10 Total 44 bottles (0.75 l Bordeaux bottles as per standard NF H 35-124)

5.2.3 UWpri 3662 / UWpri 3672 / UWgbi 3682

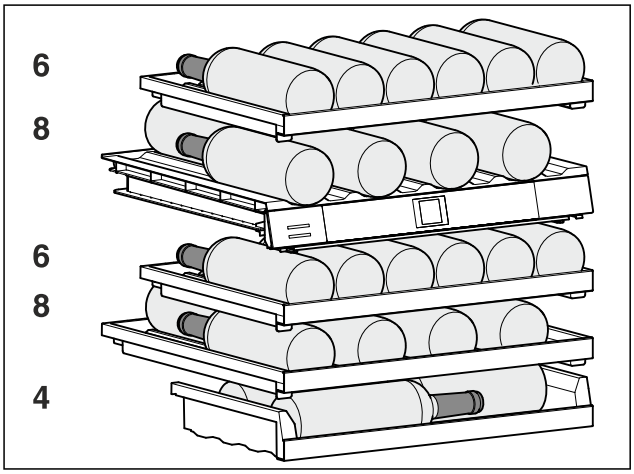

Fig. 11 Total 32 bottles (0.75 l Bordeaux bottles as per standard NF H 35-124)

5.2.4 UWpri 3762 / UWpri 3782 / UWgbi 3782

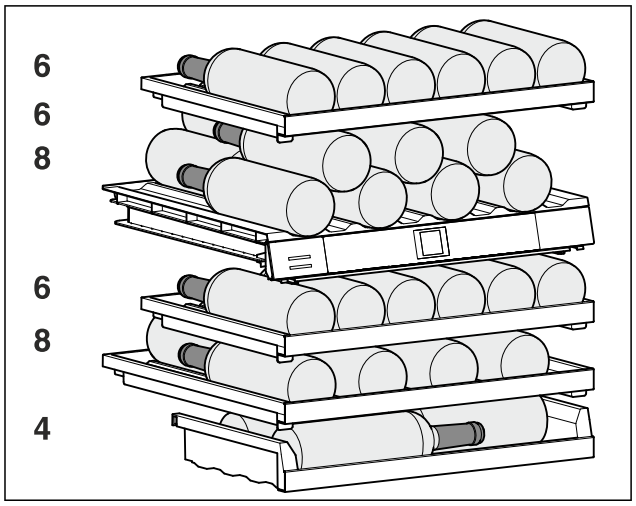

Fig. 12 Total 38 bottles (0.75 l Bordeaux bottles as per standard NF H 35-124)

5.2.5 Using the bottle holder*

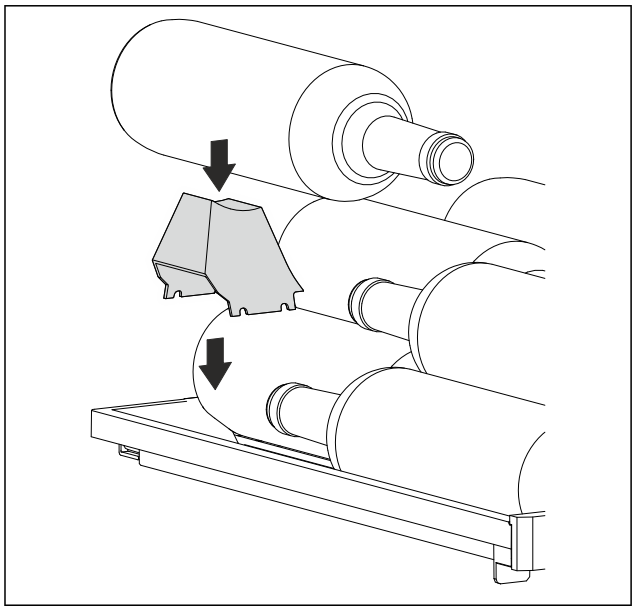

Fig. 13

6 Saving energy

- Pay attention to good ventilation. Do not cover ventilation holes or grids.
- Always keep the fan air slits clear.
- Do not install the appliance in direct sunlight or near radiators or similar sources of heat.
- If the appliance is installed directly next to an oven, the energy consumption may increase slightly. This is dependent on the service life and usage intensity of the oven.
- Energy consumption depends on the installation conditions, e.g. the ambient temperature . A warmer ambient temperature can increase the energy consumption.
- Open the appliance for as short a time as possible.
- The lower the temperature is set the higher the energy consumption.

7 Controls

7.1 Control and display elements

The display provides a quick overview of the current appliance status, the temperature setting, the status of functions and settings as well as alarm and error messages.

Operation takes place directly on the Touch & Swipe display by swiping and touching.

Functions can be activated or deactivated and setting values can be changed.

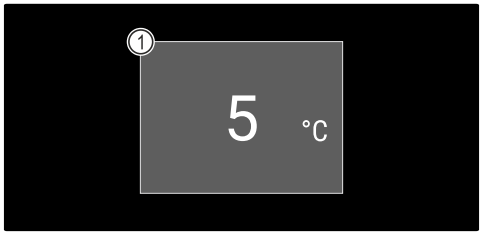

*Fig. 14 Touch & Swipe display**
(1) Status display

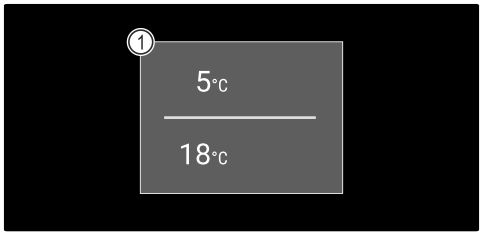

*Fig. 15 Touch & Swipe display**
(1) Status display

7.1.1 Status display

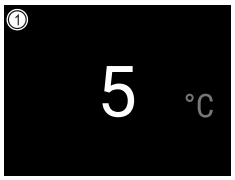

*Fig. 16 Status display**
(1) Temperature

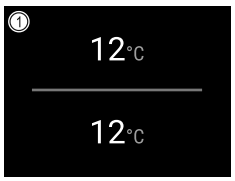

*Fig. 17 Status display**
(1) Temperature

The status display is the output display.

Navigation to the functions takes place from the status display.

7.1.2 Display symbols

Display symbols provide information about the status of the appliance.

Symbol	Appliance status
	**Standby symbol** Appliance is switched off.

*** Depending on model and options**

Symbol	Appliance status
	**Standby symbol (flashing)** Appliance is starting up.
	**Temperature (flashing)** Target temperature not yet reached. Appliance cooling to temperature set.
	**D in the display** The appliance is in demo mode.
	**Error symbol (red)** Appliance is in error state.
	**Background (blue)** Active setting or active function
	**Bar (increasing)** Press for 3 seconds to activate the setting.
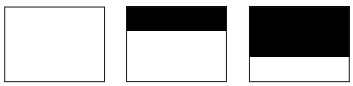	**Bar (decreasing)** Press for 3 seconds to deactivate the setting.

Symbols on the status display

7.1.3 Acoustic signals

A signal sounds in the following cases:

- If a function or a value is confirmed.
- If a function or a value can either not be activated or not deactivated.
- As soon as an error occurs.
- If there is an alarm message.

The alarms can be switched on and off in the customer menu.

7.2 Appliance functions

7.2.1 Notes on the appliance functions

The appliance functions are set at the factory so that your appliance is fully functional.

Before you alter, activate or deactivate the device functions, make sure that the following requirements are met:

❑ You have read and understood the descriptions of how the display works. (see 3 Functionality of the Touch & Swipe display)
❑ You have familiarised yourself with the operating and display elements of your appliance. (see 7.1 Control and display elements)

7.2.2 Switching appliance on and off 

This function makes it possible to switch the entire appliance on and off.

Switching on appliance

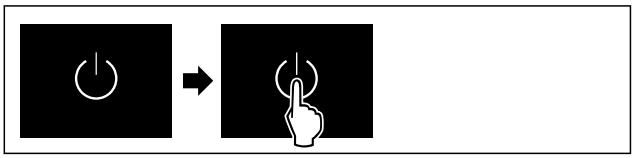

Fig. 18

▶ Carry out action steps according to the illustration.

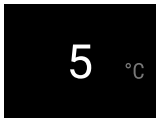

Fig. 20 Status display

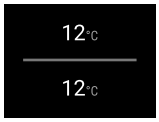

Fig. 20 Status display

▷ The temperature appears in the display.

Switching off appliance



Fig. 21

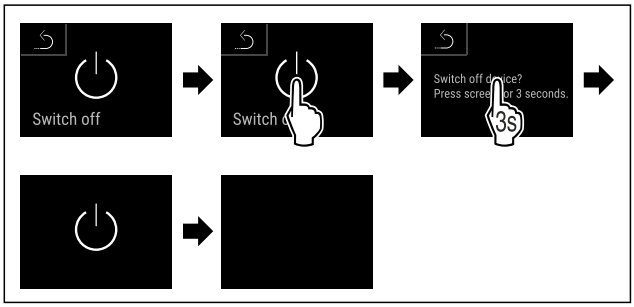

Fig. 22

▶ Carry out action steps according to the illustration.
▷ Standby symbol is shown in the display.
▷ The display switches off automatically after around 10 minutes.

7.2.3 WiFi 

Use this function to connect your appliance to WiFi. You can then operate it via the SmartDevice app on a mobile device. You can also use this function to disconnect or reset the WiFi connection.

To connect your device to WiFi, you need the SmartDeviceBox.*

More information on the SmartDevice: (see 2.3 SmartDevice)

Note
The SmartDevice function is not available in the following countries: Russia, Belarus, Kazakhstan.

You cannot use the SmartDeviceBox.*

Establishing the WiFi connection for the first time

Make sure that the following requirements are fulfilled:

❑ You have purchased and inserted a SmartDeviceBox. (see 2.3 SmartDevice) *

- ❑ You have installed the SmartDevice app (see apps.home.liebherr.com).
- ❑ Registration in the SmartDevice app is completed.



Fig. 23

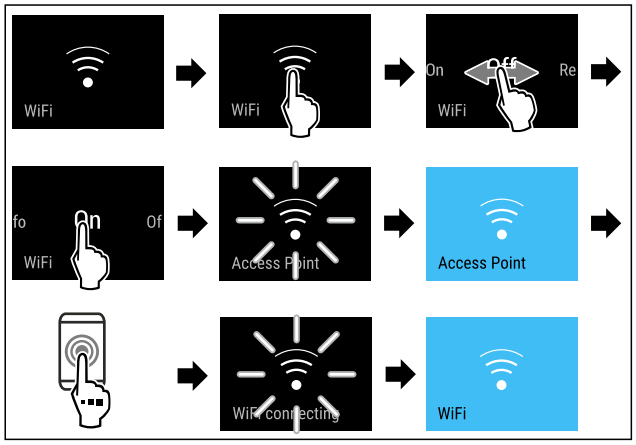

Fig. 24

▶ Carry out action steps according to the illustration.
▷ Connection is established.

Disconnecting from the WiFi



Fig. 25

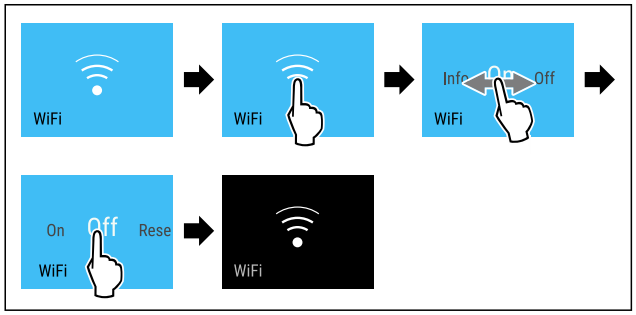

Fig. 26

▶ Carry out action steps according to the illustration.
▷ There is no connection.

Resetting the WiFi connection



Fig. 27

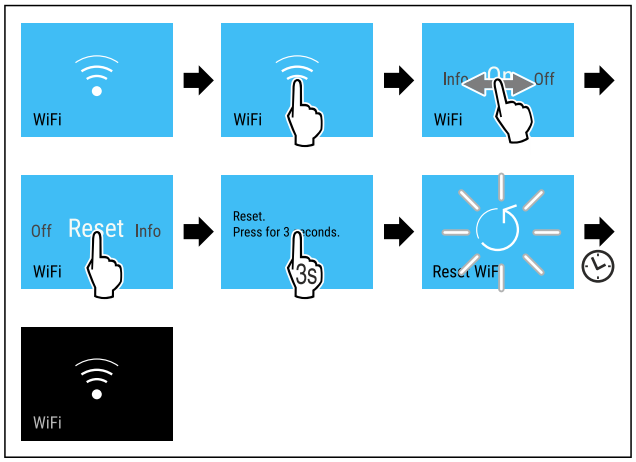

Fig. 28

▶ Carry out action steps according to the illustration.
▷ WiFi connection and other WiFi settings are reset to factory settings.

Showing information about the WiFi connection



Fig. 29

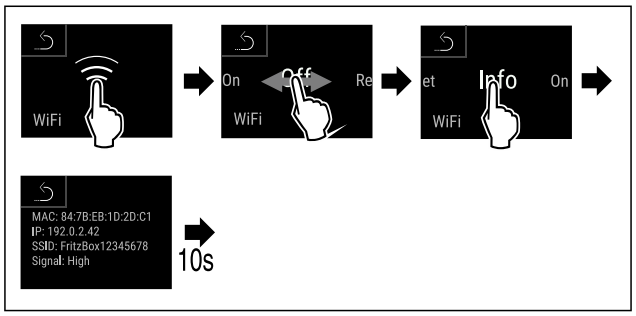

Fig. 30

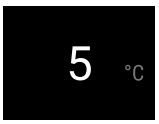

Fig. 31 Status display

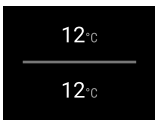

Fig. 31 Status display

▶ Carry out action steps according to the illustration.

7.2.4 Temperature

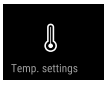

The temperature depends on the following factors:

- How often the door is opened
- How long the door is open for
- The room temperature of the installation site
- The type, temperature and amount of refrigerated food

Note
The temperature may differ from the temperature displayed in some areas of the interior.

At the correct temperature, cooled produce will keep for longer. This avoids disposing of food unnecessarily.

Setting temperature

The following steps describe how to increase the temperature, e.g. from 5 °C to 10 °C.
▶ Tap the temperature.*
▶ Tap the temperature of the desired zone.*

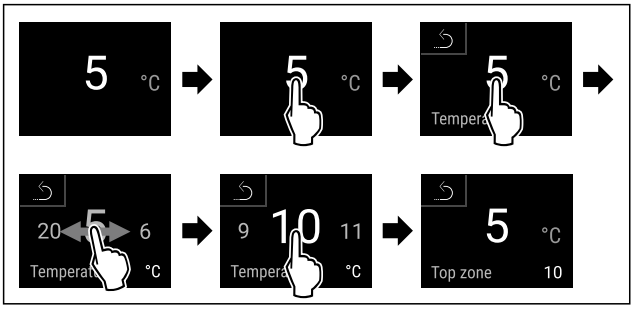

*Fig. 32 **

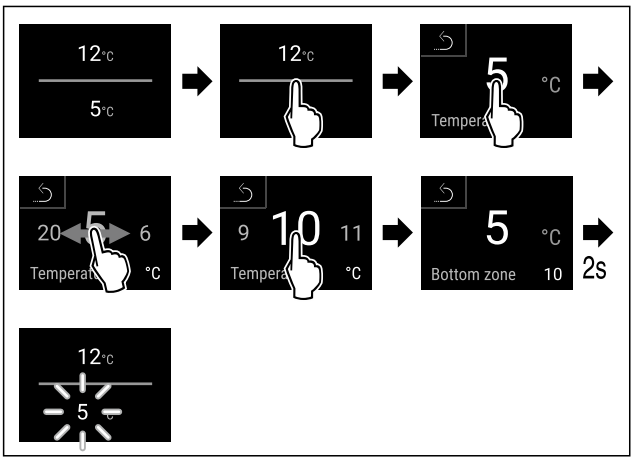

*Fig. 33 **
▶ Carry out action steps according to the illustration.
▷ Temperature is set.

7.2.5 Temperature unit

Use this function to set the temperature unit. You can set degrees Celsius or degrees Fahrenheit as the temperature unit.

Setting the temperature unit



Fig. 34

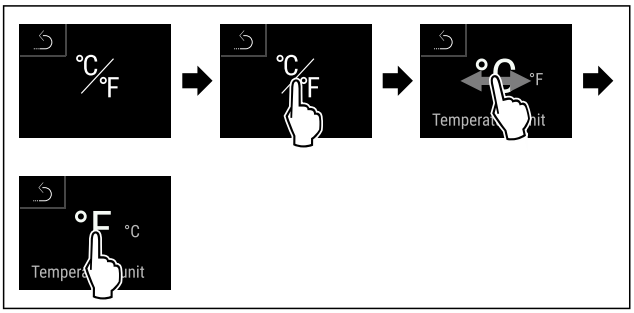

Fig. 36 Example illustration: Switch from degrees Celsius to degrees Fahrenheit.
▶ Carry out action steps according to the illustration.
▷ The temperature unit is set.

7.2.6 SabbathMode

You can use this function to activate or deactivate SabbathMode. If you activate this function, some electronic functions are switched off. As a result, your device meets the religious requirements for Jewish holidays such as Sabbath and complies with STAR-K Kosher certification.

Device status when SabbathMode is active
The status display shows SabbathMode permanently.
All functions on the display are locked except for the **Deactivate SabbathMode function**.
Active functions remain active.
The display remains bright when you close the door.
The interior lighting is deactivated.
Reminders are not implemented. The set time interval stops.
Reminders and warnings are not displayed.
There is no door alarm.
There is no temperature alarm.
After a power failure, the appliance returns to SabbathMode.

Device status

Note
This appliance has certification from the “Institute for Science and Halacha”. (www.machonhalacha.co.il)

You can find a list of STAR-K-certified appliances at www.star-k.org/appliances.

Activating SabbathMode



Fig. 37

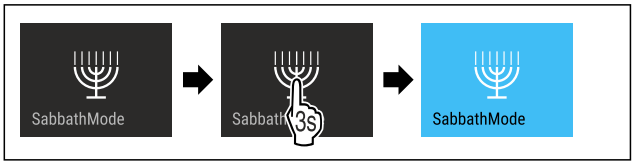

Fig. 38
▶ Carry out action steps according to the illustration.
▷ SabbathMode is activated.
▷ The status display shows SabbathMode permanently.

Deactivating SabbathMode

The SabbathMode is automatically deactivated after 80 hours. However, you can also deactivate SabbathMode manually at any time:

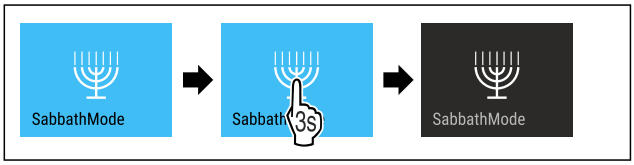

Fig. 39

▶ Carry out action steps according to the illustration.
▷ SabbathMode is deactivated.

7.2.7 HumiditySelect

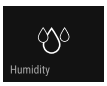

Use this function to set the humidity inside your appliance. Setting the humidity correctly will have a positive effect on the structure of the corks during long-term storage and prevent them from drying out.

Note
The frequency and duration for which the door is open influence the humidity in the appliance.

You can choose between two humidity settings:

HumiditySelect function	Temperature setting on the appliance	Application/energy consumption
Standard (preset)	10-12 °C	average humidity in the environment between 50-80% low energy consumption of the appliance
High	10-12 °C	average humidity in the environment < 50% energy consumption of the appliance increases

Increasing the humidity in the appliance



Fig. 40

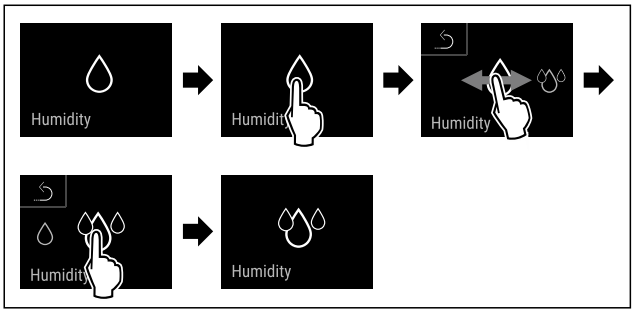

Fig. 41

▶ Carry out action steps according to the illustration.
▷ Humidity in the appliance increases.

Setting the humidity in the appliance to standard



Fig. 42

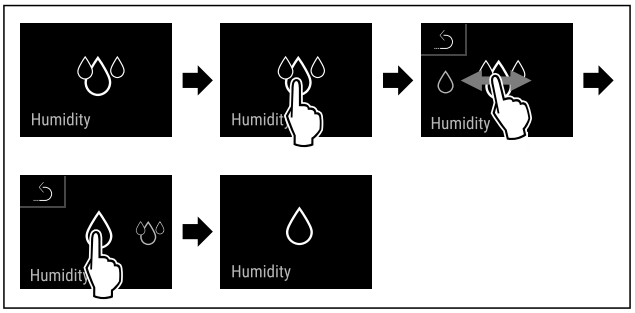

Fig. 43

▶ Carry out action steps according to the illustration.
▷ Humidity in the appliance decreases.

7.2.8 Presentation light *



Use this function to set the interior lighting.

The following brightness levels can be set:

- Off
- 20%
- 40%
- 60%
- 80%
- 100% (default)

Setting the lighting

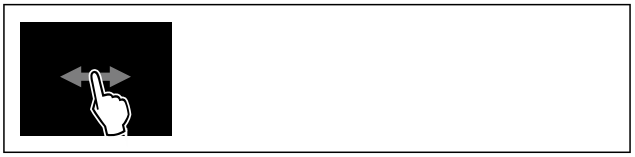

Fig. 44

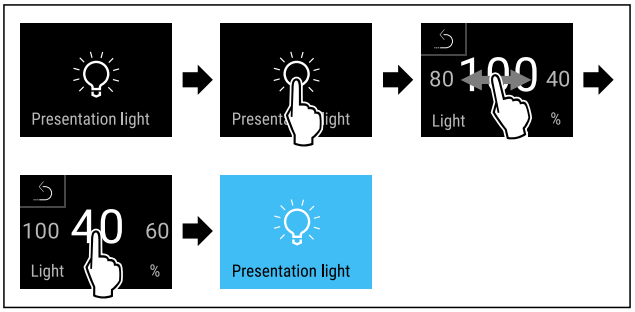

Fig. 45 Example illustration: Switch from 100% to 40%

▶ Carry out action steps according to the illustration.
▷ The brightness is set.

7.2.9 Display brightness

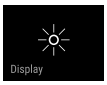

Use this function to set the display brightness in stages.

You can select the following brightness levels:

- 20 %
- 40 %
- 60 %
- 80 %
- 100 % (pre-setting)

* Depending on model and options

Setting the brightness



Fig. 46

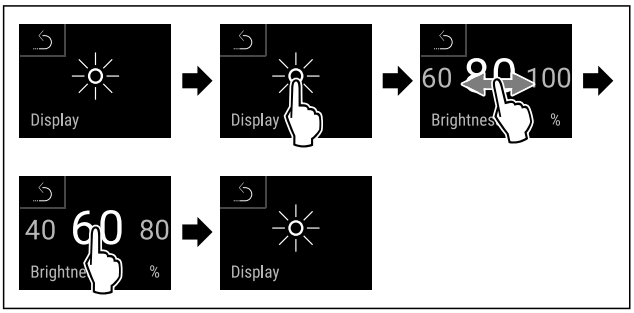

Fig. 47 Example illustration: Switch from 80 % to 60 %.

▶ Carry out action steps according to the illustration.
▷ The brightness is set.

7.2.10 Door alarm

Use this function to activate or deactivate the door alarm. The door alarm sounds if the door is open for too long. The door alarm is activated on delivery. You can set how long the door may be open before the door alarm sounds.

The following values can be set:

- 1 minute
- 2 minutes
- 3 minutes
- Off

Setting the door alarm



Fig. 48

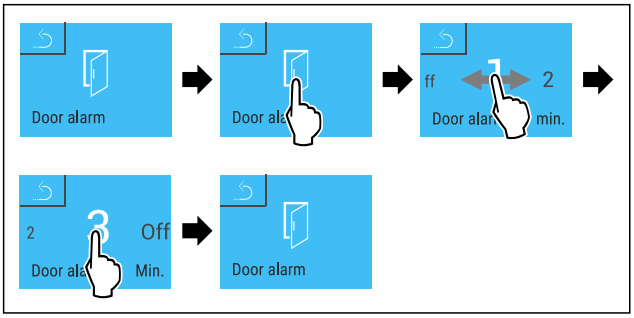

Fig. 49 Example illustration: Change door alarm from 1 minute to 3 minutes.

▶ Carry out action steps according to the illustration.
▷ The door alarm is set.

Deactivating the door alarm



Fig. 51

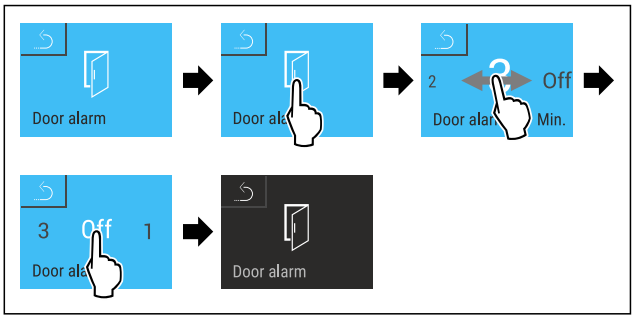

Fig. 52

▶ Carry out action steps according to the illustration.
▷ The door alarm is deactivated.

7.2.11 Light alarm

This setting allows the visual alarm messages in the display to also be emphasised by flashing appliance lighting.

Activating light alarm



Fig. 53

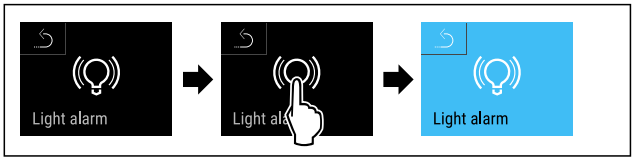

Fig. 54

▶ Carry out action steps according to the illustration.
▷ The light alarm is activated.

Deactivating light alarm



Fig. 55

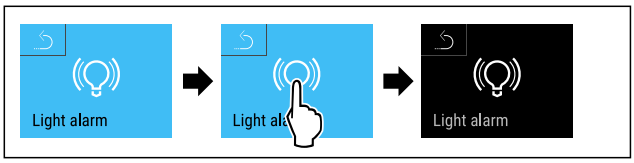

Fig. 56

▶ Carry out action steps according to the illustration.
▷ The light alarm is activated.

7.2.12 Alarm tone

This function enables all alarm sounds, such as door alarms, to be switched on and off.

Activating the alarm tone



Fig. 57

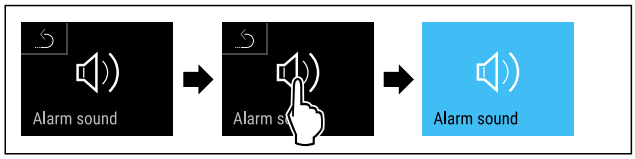

Fig. 58

▶ Carry out action steps according to the illustration.
▷ The alarm tone is activated.

Deactivating the alarm tone



Fig. 59

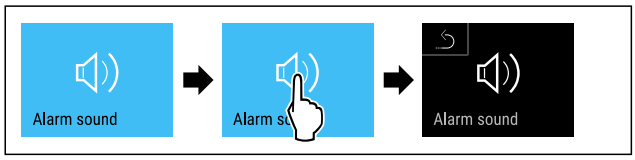

Fig. 60

▶ Carry out action steps according to the illustration.
▷ The alarm tone is deactivated.

7.2.13 Key tone

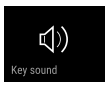

This function makes it possible to switch all button sounds, confirmation sounds, and the startup sound on and off.

Activating the key tone



Fig. 61

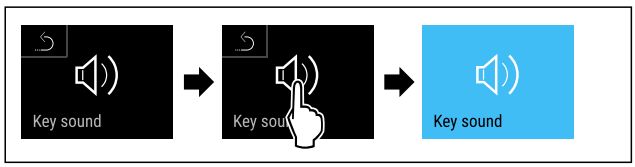

Fig. 62

▶ Carry out action steps according to the illustration.
▷ The key tone is activated.

Deactivating the key tone



Fig. 63

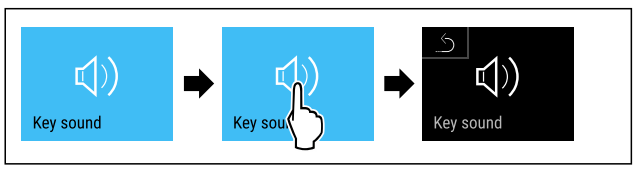

Fig. 64

▶ Carry out action steps according to the illustration.
▷ The key tone is deactivated.

7.2.14 Display lock



This setting avoids accidental operation of the appliance.

Application:

- Prevent settings and functions being changed unintentionally.
- Prevent appliance being switched off unintentionally.
- Prevent temperature being set unintentionally.

Activating the display lock



Fig. 65

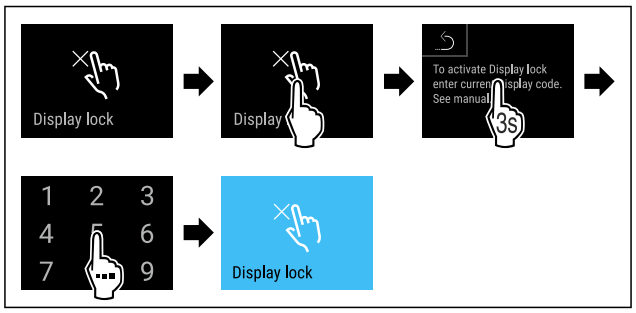

Fig. 66

▶ Carry out action steps according to the illustration.
▷ The display lock is activated.
▷ The status display appears.

Unlocking the display lock for a short time

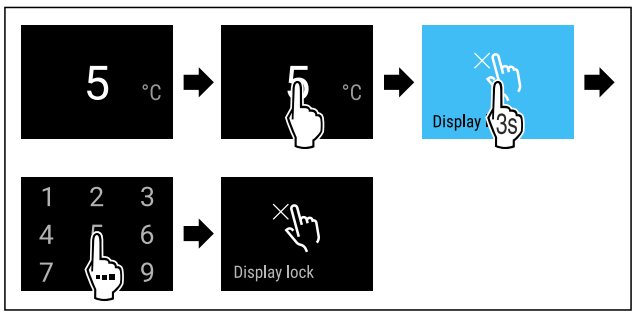

*Fig. 67 **

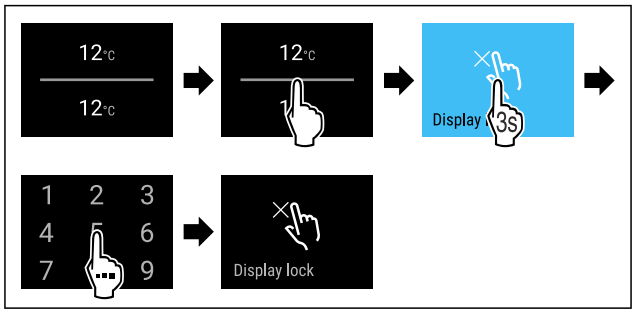

*Fig. 68 **

▶ Carry out action steps according to the illustration.
▷ The display lock is deactivated.
▷ The status display appears.

Deactivating the display lock

▶ Carry out action steps (see Unlocking the display lock for a short time) .

** Depending on model and options**



Fig. 69

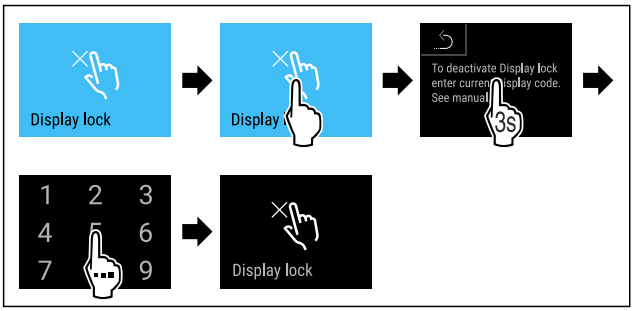

Fig. 70

▶ Carry out action steps according to the illustration.
▷ The display lock is deactivated.
▷ The status display appears.

7.2.15 Access codes

Access codes are required for some functions. You can only use the following functions after entering the appropriate access code:

- Display lock

Code for the display lock 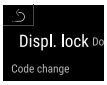

This function allows the display lock code to be changed or reset.

Changing the display lock code

The code can be changed in three steps:

- Enter old code.
- Enter new code.
- Confirm new code.

Note
In the following example, you change the factory-set code **1 1 1 1** to the new code **2 3 4 5**.



Fig. 71

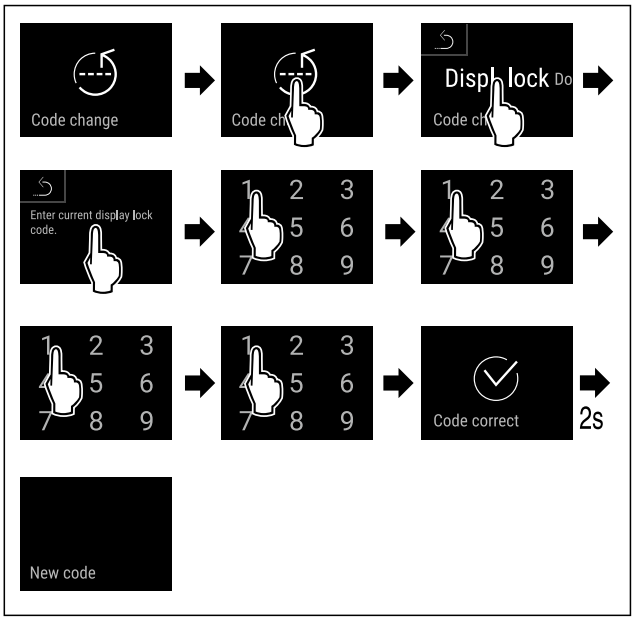

Fig. 72

▶ Carry out action steps according to the illustration.
▷ Entering the old code is successful.

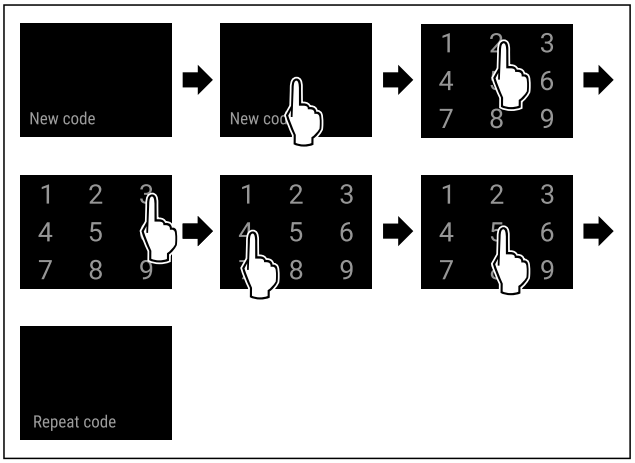

Fig. 73

▶ Carry out action steps according to the illustration.
▷ The new code has been successfully entered.

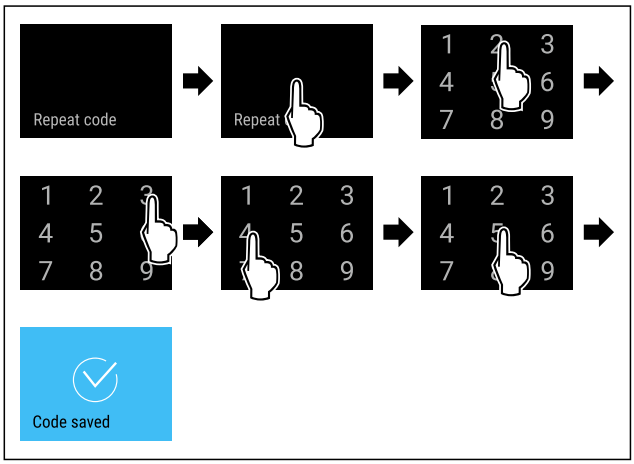

Fig. 74

▶ Carry out action steps according to the illustration.
▷ Confirmation of the new code is successful.
▷ The code has been changed.

Resetting the display lock code

If you no longer know the code, you can reset it.

▶ Reset appliance to factory settings. (see 7.2.20 Resetting to factory settings)
▷ The appliance has been reset to its original settings.
▷ The factory-set code is: **1 1 1 1**

7.2.16 Language

This setting allows the display language to be set.

Setting language



Fig. 75

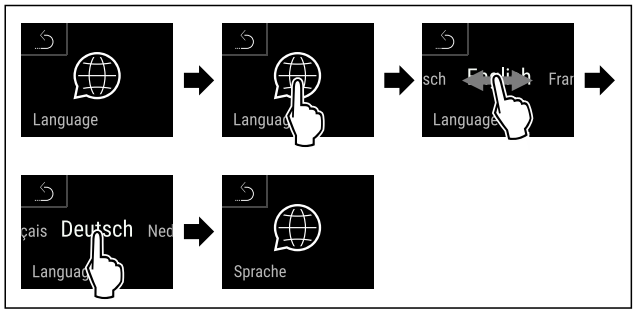

Fig. 76

▶ Carry out action steps according to the illustration.
▷ The selected language is set.

7.2.17 Appliance and software information

Use this function to indicate the model name, index, serial number and service number of your device. You will need the device information when you contact customer service. (see 10.4 Customer Service)

Indicating the device information



Fig. 77

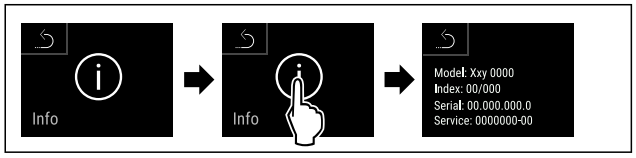

Fig. 78

▶ Carry out action steps according to the illustration.
▷ Display indicates device information.

Displaying software information



Fig. 79

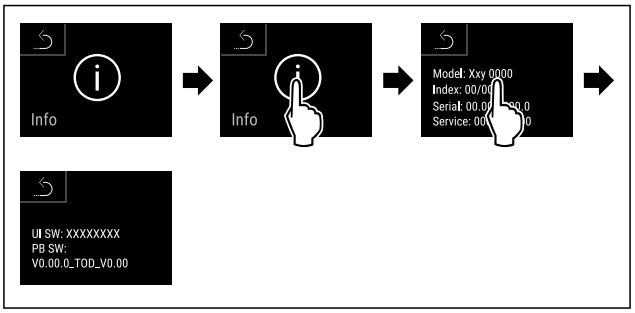

Fig. 80

▶ Carry out action steps according to the illustration.
▷ Display shows software information.

7.2.18 Reminder

Use this function to activate or deactivate the reminder to change the FreshAir activated carbon filter.

Deactivating the reminder



Fig. 81

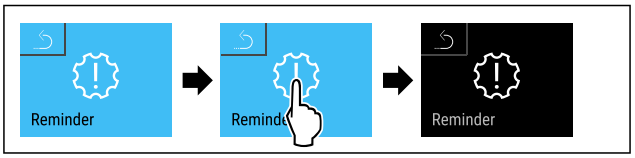

Fig. 82

▶ Carry out steps according to the illustration.
▷ Reminder is deactivated.

Activating the reminder



Fig. 83

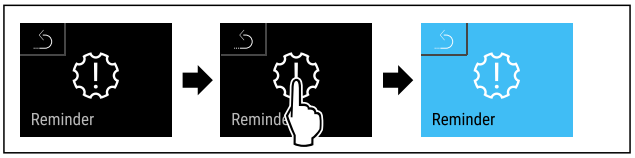

Fig. 84

▶ Carry out steps according to the illustration.
▷ Reminder is activated.

7.2.19 Demo mode

Demo mode is a special feature for dealers who want to demonstrate appliance features. If you activate demo mode, all refrigeration functions are deactivated.

If you switch on your appliance and a “D” appears on the status display, demo mode is already activated.

If you activate and then deactivate demo mode, the appliance will be reset to factory defaults. (see 7.2.20 Resetting to factory settings)

Activating demo mode

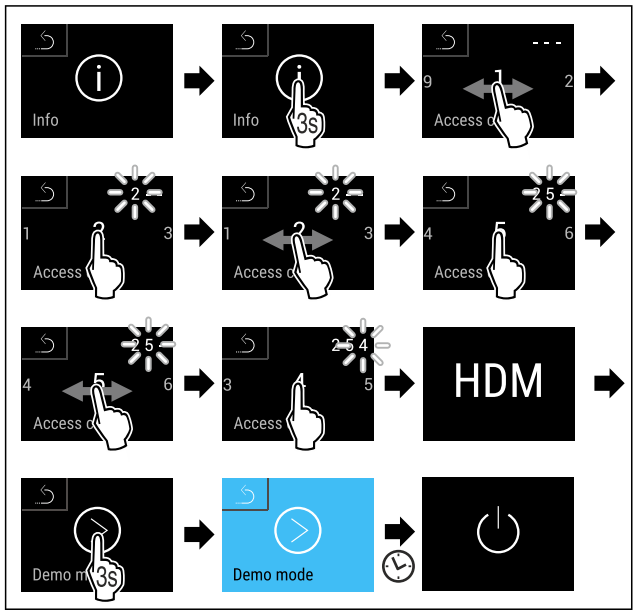

Fig. 85

▶ Carry out action steps according to the illustration.
▷ Demo mode is activated.
▷ Appliance is switched off.
▶ Switch on the appliance. (see 4.1 Switching on appliance (first use))
▷ “D” appears in the status display.

Deactivating demo mode

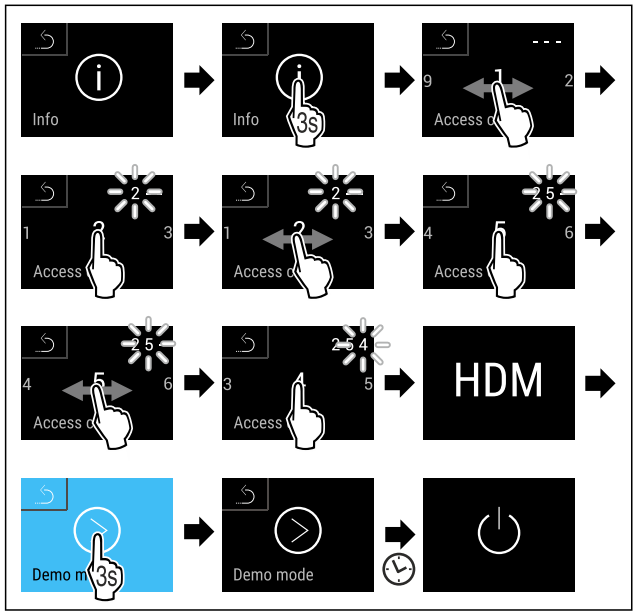

Fig. 86

▶ Carry out action steps according to the illustration.
▷ Demo mode is deactivated.
▷ Appliance is switched off.
▶ Switch on the appliance. (see 4.1 Switching on appliance (first use))
▷ Appliance is reset to factory settings.

7.2.20 Resetting to factory settings



Use this function to reset all settings to factory defaults. All settings you have made so far are reset to their original settings.

Performing a reset



Fig. 87

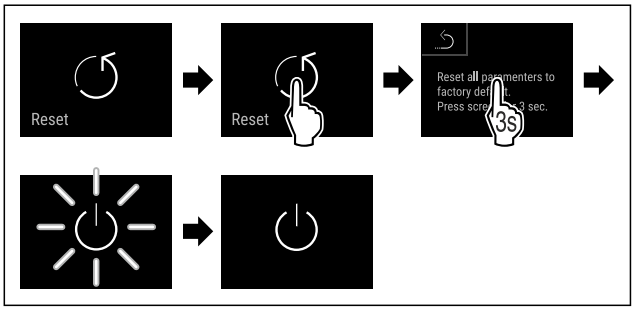

Fig. 88

▶ Carry out action steps according to the illustration.
▷ Device is reset.
▷ Device is switched off.
▶ Restart the device. (see 4.1 Switching on appliance (first use))

7.3 Message

7.3.1 Warnings

Warnings are issued by means of an acoustic signal and visually via a symbol on the display. The signal gets louder until the warning is acknowledged.

Message (red)	**Cause**	**Remedy**
 **Door open**	This message appears if the door is open for too long.	Close the door. Tap briefly. Alarm is stopped. **Note** The time until the message appears can be set. (see 7.2.10 Door alarm)

Message (red)	**Cause**	**Remedy**
 **Temperature alarm**	This message appears if the temperature does not match the set temperature. Reasons for differences in temperature can be: Warm produce for cooling has been placed inside. Too much warm air has got in while you were sorting out the freezer or removing items. The power was cut off for a prolonged period.	Tap briefly. Information about errors and appliance status are displayed. Tap briefly. Warmest/coldest temperature, date and time are displayed. Tap briefly. The status screen is displayed. The current temperature and the alarm symbol flash red until the set temperature is reached. Check the quality of the refrigerated goods.
 **Error**	The appliance is faulty, there is an appliance error or a component of the appliance has a fault.	Store the cooled produce elsewhere. 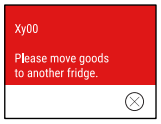 Tap briefly. The error code (e.g. BT021) is displayed. Tap briefly. A further error code is displayed if there is one **or** Status screen is displayed with flashing error symbol. 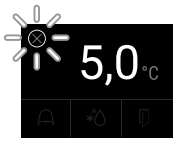 Swiping or tapping the display will show the error code(s) again. Make a note of error code(s) and contact Customer Service. (see 10.4 Customer Service)
 **Power cut**	The message appears following an interruption to the electricity supply.	Tap briefly. Battery's state of charge, information about errors and appliance status are displayed Tap briefly. The warmest temperature and the period of power interruptions are displayed. Tap briefly. The status screen is displayed. The current temperature and the alarm symbol flash red until the set temperature is reached. Check the quality of the refrigerated goods.
 **WiFi error**	Wi-Fi connection is interrupted.	Check connection. Press briefly. Alarm is stopped.
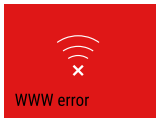 **WWW error, WiFi**	This message appears if there is no internet connection via WiFi.	Check connection. Press briefly. Alarm is stopped.

7.3.2 Reminders

Reminders appear when you are being asked to do something. The are issued by means of an acoustic signal and visually via a symbol on the display. Acknowledge the message by pressing the confirmation button.

Message (yellow)	**Cause**	**Remedy**
 **ReplaceFreshAir activated charcoal filter**	The message appears every 6 months.	ReplaceFreshAir activated charcoal filter, Press briefly. Reminder is closed.

8 Features

8.1 Safety lock

The lock in the appliance door is equipped with a safety mechanism.

8.1.1 Locking appliance

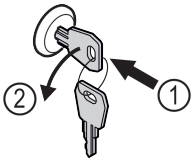

Fig. 89 Example illustration

▶ Insert key.
▶ Turn key anticlockwise by 90°.
▷ The appliance is locked.

8.1.2 Unlocking appliance

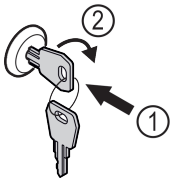

Fig. 90 Example illustration

▶ Insert key *Fig. 90 (1)*.
▶ Turn key clockwise by 90° *Fig. 90 (2)*.
▷ The appliance is unlocked.

8.2 TipOpen

TipOpen is a door opening aid that only works when the appliance is in operation.

NOTICE
Risk of damage due to blocking of the door opening aid!
Defective door opening aid. If something is blocking the door opening aid, you will hear a loud clacking noise. If this happens repeatedly, you may permanently damage the door opening aid.
▶ Do not block the door opening aid.

8.2.1 Opening the door

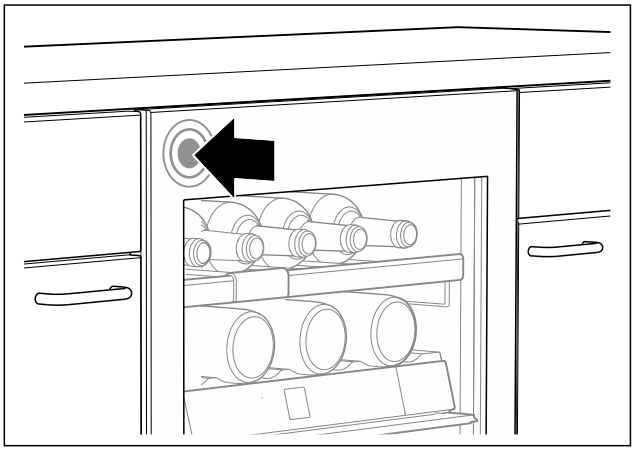

Fig. 91

▶ Door opening on the left-hand side: Press the top left door slightly inwards and release.

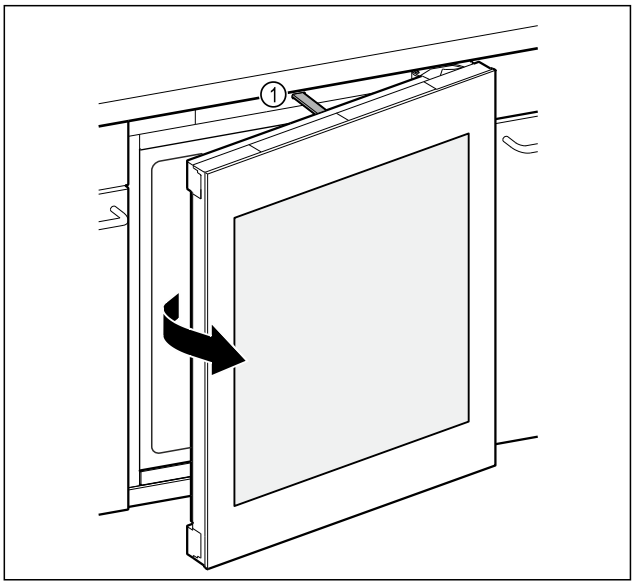

Fig. 92

▷ Push rod *Fig. 92 (1)* opens door approximately 7 cm.
▶ Open the door fully by hand within three seconds to prevent it from closing automatically.

8.2.2 Closing the door

Ensure that the following requirement is met:

❑ Push rod is retracted.

▶ Close the door.

8.2.3 Resetting TipOpen

If something is blocking the door opening aid, the push rod can no longer reach its starting position. To ensure that TipOpen continues to work, TipOpen must be reset.
▶ Remove mains plug.
▶ Wait about five seconds.

▶ Insert plug.
▷ The push rod moves to the starting position and is flush with the front of the appliance.

8.3 Wooden grid

The appliances are equipped with a wooden grid for wine storage.

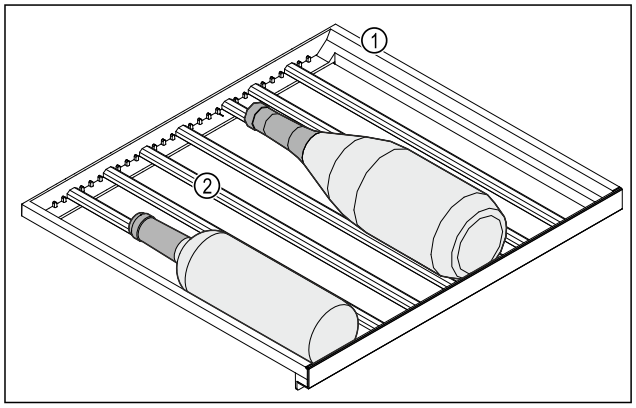

Fig. 93 Example illustration
(1) Wooden grid **(2)** Bar

The standard positions for the bars are indicated by notches. If you use these, you can store the maximum number of bottles. (see 5.2 Storage sketch)

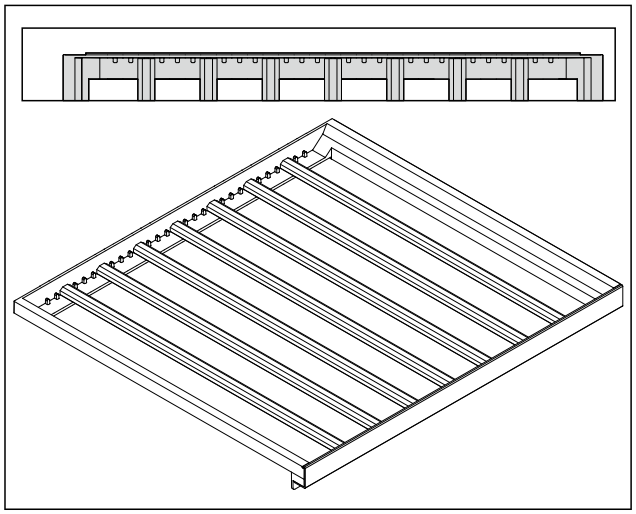

Fig. 94 Arrangement of the bars for maximum number of bottles.

8.3.1 Moving the bar

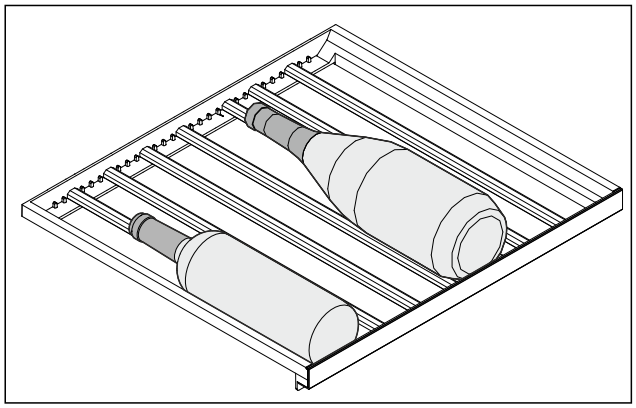

Fig. 95 Example illustration

You can remove the bars in the wooden rack to store larger or smaller bottles.

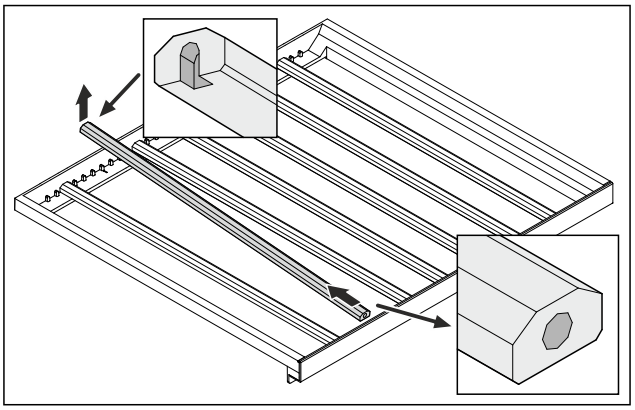

Fig. 96 Example illustration

▶ Lift and pull out the bar at the rear.

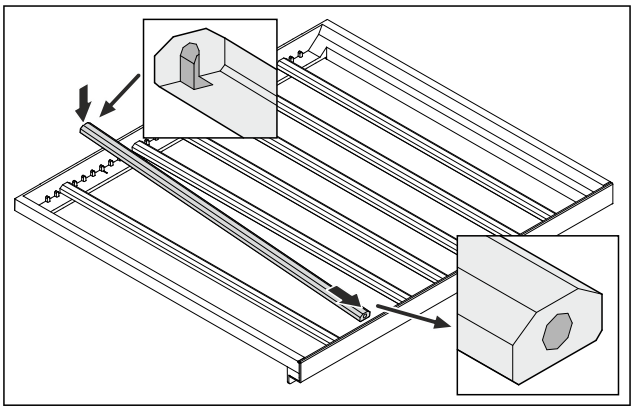

Fig. 97 Example illustration

▶ Insert the bar in the desired position.

8.3.2 Removing the wooden grid

You can remove the wooden grid for cleaning.

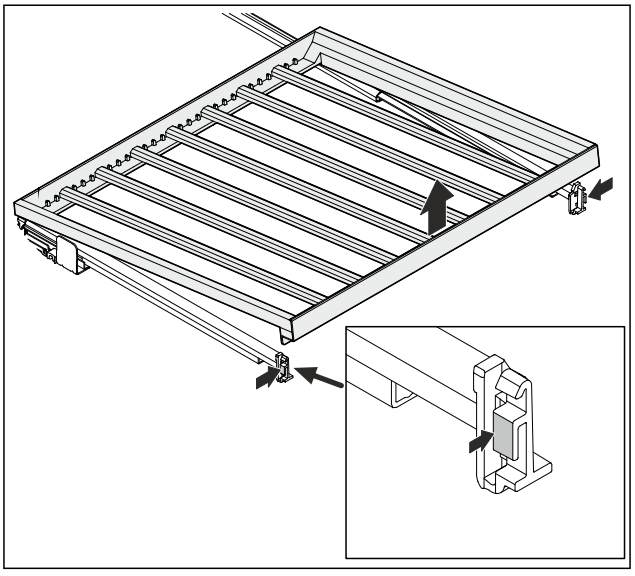

Fig. 98 Example illustration

▶ Press in slightly on both sides and lift up to remove.

8.3.3 Inserting the wooden grid

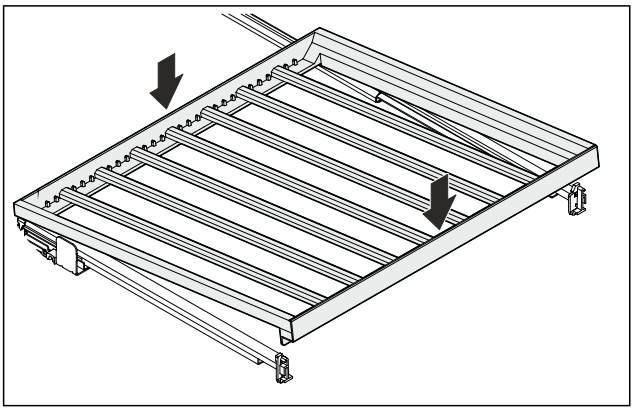

Fig. 99 Example illustration

- ▶ Place the wooden grid at the rear on the rails on the right and left.
- ▶ Lower the wooden grid at the front.
- ▷ The wooden grid locks in.
- ▷ Wooden grid is firmly seated in the rails.

8.4 Labels

Description labels as accessories can be purchased from your specialist dealer. You can use these to note the types of wine that are stored in the respective compartment.

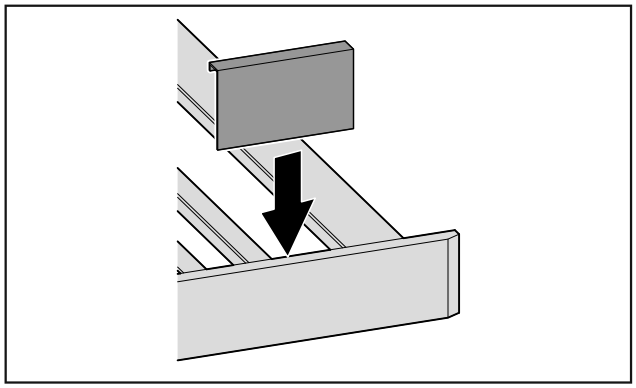

Fig. 100

- ▶ Attach the label from above.

9 Maintenance

9.1 FreshAir activated carbon filter

Wine is constantly developing according to its ambient conditions, so air quality is essential for preservation.

The FreshAir activated charcoal filter guarantees optimal air quality.

- ❑ Change the activated charcoal filter every 6 months.
- ❑ Dispose of the activated charcoal filter with regular household waste.

Note
FreshAir activated charcoal filters can be purchased from the Liebherr-Hausgeräte store at home.liebherr.com/shop/de/deu/zubehor.html.

9.1.1 Replacing the FreshAir activated charcoal filter

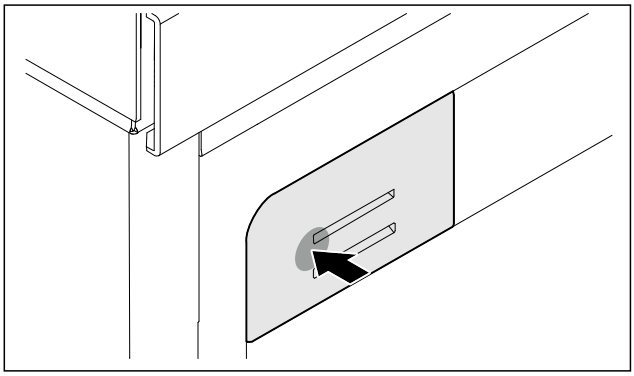

Fig. 101 Example illustration

- ▶ Press the filter holder in, release it again and pull it out.

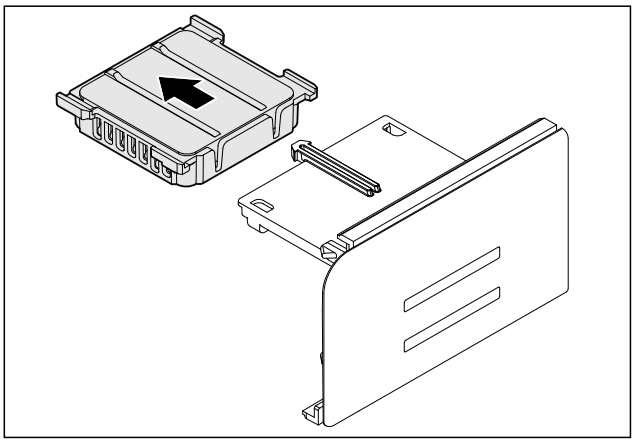

Fig. 102 Example illustration

- ▶ Remove the old filter from the holder.

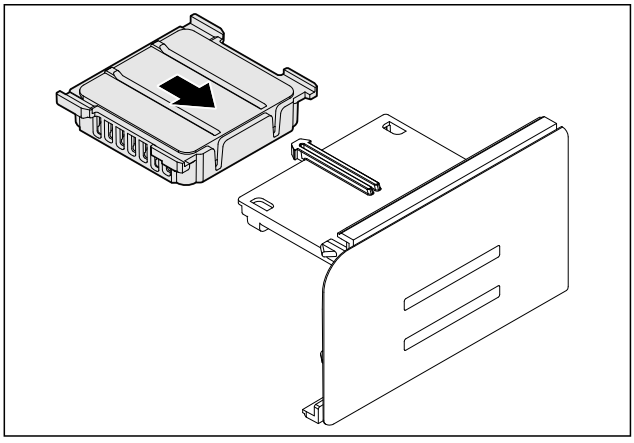

Fig. 103 Example illustration

- ▶ Snap the new filter into the holder.

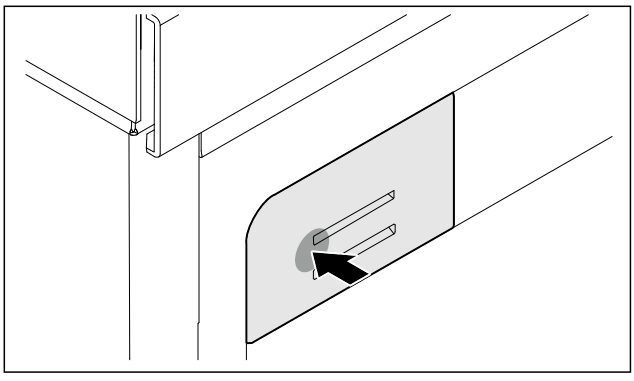

Fig. 104 Example illustration

▶ Press the filter holder in as far as it will go and release.
▷ FreshAir activated charcoal filter has been changed.

9.2 Cleaning the appliance

9.2.1 Ready

WARNING
Danger of electric shock!
▶ Remove the refrigerator connector or interrupt the power supply.

WARNING
Risk of fire
▶ Do not damage the refrigeration circuit.

▶ Empty the appliance.
▶ Remove mains connector.

9.2.2 Cleaning the interior

NOTICE
Improper cleaning!
Damage to the appliance.
▶ Only use soft cleaning cloths and ph-neutral all-purpose cleaners.
▶ Do not uses abrasive sponges or steel wool which may cause scratches.
▶ Do not use any sharp or abrasive cleaning agents, nor any that contain sand, chloride or acid.

▶ Plastic surfaces: clean by hand with a soft clean cloth, lukewarm water and a little detergent.
▶ Metal surfaces: clean by hand with a soft clean cloth, lukewarm water and a little detergent.
▶ Drain hole: remove deposits using a thin item (for example a cotton bud).

9.2.3 Clean the components

NOTICE
Improper cleaning!
Damage to the appliance.
▶ Only use soft cleaning cloths and ph-neutral all-purpose cleaners.
▶ Do not uses abrasive sponges or steel wool which may cause scratches.
▶ Do not use any sharp or abrasive cleaning agents, nor any that contain sand, chloride or acid.

Clean with a damp cloth:

- Retractable rails
  Please note: The grease in the tracks is used for lubrication and must not be removed!

▶ To disassemble components: see the relevant section.
▶ Clean the components.

9.2.4 After cleaning

▶ Wipe the appliance and the components dry.
▶ Connect and switch on the appliance.
▶ Repeat cleaning regularly.

10 Customer help

10.1 Technical specifications

Temperature range	
Cooling	5 °C to 20 °C

Lighting	
Class[1]	Light source
This product contains one or more energy efficiency class F light sources.*	LED*
This product contains one or more energy efficiency class G light sources.*	LED*

[1] *The appliance may contain light sources with different energy efficiency classes. The lowest energy efficiency class is indicated.*

For appliances with a WiFi connection:*

Frequency specification*	
Frequency band	2.4 GHz
Maximum radiated power	< 100 mW
Purpose of the wireless equipment	Integration in the local WiFi network for data communication

10.2 Operating noises

The appliance makes different noises when it is on.

- At **higher temperatures** the appliance uses less energy but works for longer. It is **quieter**.
- At **lower temperatures** the food is cooled faster. It is **louder**.

  Examples:
  - Functions on (see 7.2 Appliance functions)
  - Fan running
  - Food recently added
  - High ambient temperature
  - Door open for a while

Noise	Possible cause	Type of noise
Bubbling and splashing	Coolant flowing into the cooling circuit.	Normal operating noise
Hissing	Coolant sprays into the cooling circuit.	Normal operating noise
Humming	The appliance is cooling. The volume depends on the cooling output.	Normal operating noise
Suction noises	Soft-closing door is being opened and closed.	Normal operating noise
Humming and rustling	The fan is running.	Normal operating noise
Clicking	Components are switched on and off.	Normal switching noise

*** Depending on model and options**

Noise	Possible cause	Type of noise
Rattling or humming	Valves or flaps are working.	Normal switching noise

Noise	Possible cause	Type of noise	Lifting
Vibration	Improper installation	Defective noise	Check the installation. Level the appliance.
Rattling	Components, items inside the appliance	Defective noise	Secure components. Leave enough space between the items.

10.3 Technical fault

Your appliance is designed and built to ensure it works reliably and has a long service life. In the unlikely event that a fault occurs during operation, please check whether it is due to an operating error. If so, you will be charged for the callout and repair costs even if it falls within the warranty period.

You can fix the following faults yourself.

10.3.1 Appliance function

Defect	Cause	Remedy
The appliance is not working.	→ The appliance is not switched on.	▶ Switch the appliance on.
	→ The power plug is not properly plugged into the socket.	▶ Check the power plug.
	→ There is something wrong with the power outlet fuse.	▶ Check the fuse.
	→ Power cut	▶ Keep the appliance closed.
	→ The IEC socket is not plugged into the appliance correctly.	▶ Check the IEC socket.
Temperature is not cold enough.	→ The appliance door is not closed properly.	▶ Close the appliance door.
	→ Not enough ventilation.	▶ Keep ventilation grille clear, and clean it.
	→ The ambient temperature is too high.	▶ Problem solution:
	→ The appliance was opened too many times or for too long.	▶ Wait to see if the required temperature corrects itself. If not, contact Customer Service. (see 10.4 Customer Service)
	→ The temperature is set incorrectly.	▶ Turn down the temperature and check after 24 hours.
	→ The appliance is too close to a heat source (oven, radiator, etc).	▶ Move the appliance or the heat source.
	→ The appliance was not correctly installed in the recess.	▶ Check if the appliance was installed correctly and that the door closes properly.
The door seal is defective or needs to be replaced for another reason.	→ You can replace the door seal, depending on your model. It can be replaced without the need for special tools.	▶ Contact Customer Service. (see 10.4 Customer Service)
The door seal is defective or needs to be replaced for another reason.	→ The door seal can be replaced. It can be replaced without the need for special tools.	▶ Contact Customer Service. (see 10.4 Customer Service)
The appliance builds up too much ice or condensation.	→ The door seal may have slipped out of its groove.	▶ Check that the door seal is well fitted in the groove.

10.3.2 Features

Defect	Cause	Remedy
The internal light does not come on.	→ The appliance is not switched on.	▶ Switch the appliance on.
	→ The door was open for longer than 15 minutes.	▶ Interior lighting switches off automatically after about 15 minutes when the door is open.
	→ The LED interior light is faulty or the lid is damaged.	▶ Contact Customer Service. (see 10.4 Customer Service)

10.4 Customer Service

First check whether you can rectify the fault yourself (see 10 Customer help) . If you cannot rectify the problem, contact Customer Service.

You can find the address in the enclosed brochure “Liebherr-Service” or at home.liebherr.com/service.

WARNING
Unprofessional repair!
Injuries.
- ▶ Have any repairs and action - not expressly specified - on the appliance and mains cable carried out by service personnel only. (see 9 Maintenance)
- ▶ A damaged mains cable may only be replaced by the manufacturer, the manufacturer’s Customer Service or a similarly qualified person.
- ▶ In the case of appliances with an IEC connector, the change may be made by the customer.

10.4.1 Contacting Customer Service

Make sure that the following appliance information is available:

- ❑ Appliance name (model and index)
- ❑ Service no. (Service)
- ❑ Serial no. (S no.)

▶ Call up the appliance information via the display.
-or-
▶ Refer to the type plate for appliance information. (see 10.5 Model plate)

▶ Note down the appliance information.
▶ Notify customer service: Report errors and the appliance information.
▷ This will help us to provide you with a faster, more accurate service.
▶ Follow further instructions from Customer Service.

10.5 Model plate

The type plate is located on the bottom inside of the machine.

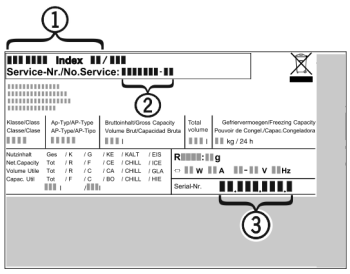

Fig. 105
(1) Appliance description
(2) Service no.
(3) Serial no.

▶ Note the data on the model plate.

11 Shutting down

▶ Empty the appliance.
▶ Switch off appliance. (see 7.2.2 Switching appliance on and off)
▶ Pull the mains plug out of the socket.
▶ Remove the IEC socket if required: Pull the IEC socket out of the appliance plug and move it to the left and right at the same time.
▶ Clean appliance. (see 9.2 Cleaning the appliance)
▶ Leave the door open, so that no unpleasant odours arise.

12 Disposal

Ensure that the following requirements are met:

- ❑ Meaning of the symbols on the appliance: are familiar. (see 1.14 Symbols on the appliance)
- ❑ Notes on disposal are familiar. (see 1.8 Disposal)

12.1 Preparing the appliance for disposal

▶ Shutting your appliance down. (see 11 Shutting down)
▶ Remove lamps without damage.

12.2 Disposing of the appliance in an environmentally friendly manner

WARNING
Leaking coolant and oil!
Fire. The coolant contained in the appliance is eco-friendly, but also flammable. The oil contained in the appliance is flammable. Escaping coolant and oil can ignite if the concentration is high enough and in contact with an external heat source.
▶ Do not damage the pipelines of the coolant circuit and the compressor.

▶ Observe the notes on transporting the appliance.
▶ Remove the appliance without damaging it.
▶ Dispose of lamps in accordance with the aforementioned specifications.
▶ Dispose of appliance according to specifications.



home.liebherr.com/fridge-manuals

EN wine cooling cabinet

Issue date: 20251201

Part number index: 7083722-00

Liebherr-Hausgeräte GmbH
Memminger Straße 77-79
88416 Ochsenhausen
Deutschland

tehnoteka

https://tehnoteka.rs

Ovaj dokument je originalno proizveden i objavljen od strane proizvođača, brenda Liebherr, i preuzet je sa njihove zvanične stranice. S obzirom na ovu činjenicu, Tehnoteka ističe da ne preuzima odgovornost za tačnost, celovitost ili pouzdanost informacija, podataka, mišljenja, saveta ili izjava sadržanih u ovom dokumentu.

Napominjemo da Tehnoteka nema ovlašćenje da izvrši bilo kakve izmene ili dopune na ovom dokumentu, stoga nismo odgovorni za eventualne greške, propuste ili netačnosti koje se mogu naći unutar njega. Tehnoteka ne odgovara za štetu nanesenu korisnicima pri upotrebi netačnih podataka. Ukoliko imate dodatna pitanja o proizvodu, ljubazno vas molimo da kontaktirate direktno proizvođača kako biste dobili sve detaljne informacije.

Za najnovije informacije o ceni, dostupnim akcijama i tehničkim karakteristikama proizvoda koji se pominje u ovom dokumentu, molimo posetite našu stranicu klikom na sledeći link:

https://tehnoteka.rs/p/liebherr-ugradna-vinska-vitrina-uwgbi-3682-akcija-cena/