tehnoteka

https://tehnoteka.rs

Uputstvo za upotrebu (EN)

LIEBHERR kombinovani frižider CUe 2831

LIEBHERR



Tehnoteka je online destinacija za upoređivanje cena i karakteristika bele tehnike, potrošačke elektronike i IT uređaja kod trgovinskih lanaca i internet prodavnica u Srbiji. Naša stranica vam omogućava da istražite najnovije informacije, detaljne karakteristike i konkurentne cene proizvoda.

Posetite nas i uživajte u ekskluzivnom iskustvu pametne kupovine klikom na link:

https://tehnoteka.rs/p/liebherr-kombinovani-frizider-cue-2831-akcija-cena/

User Guide

fridge/freezer

EN

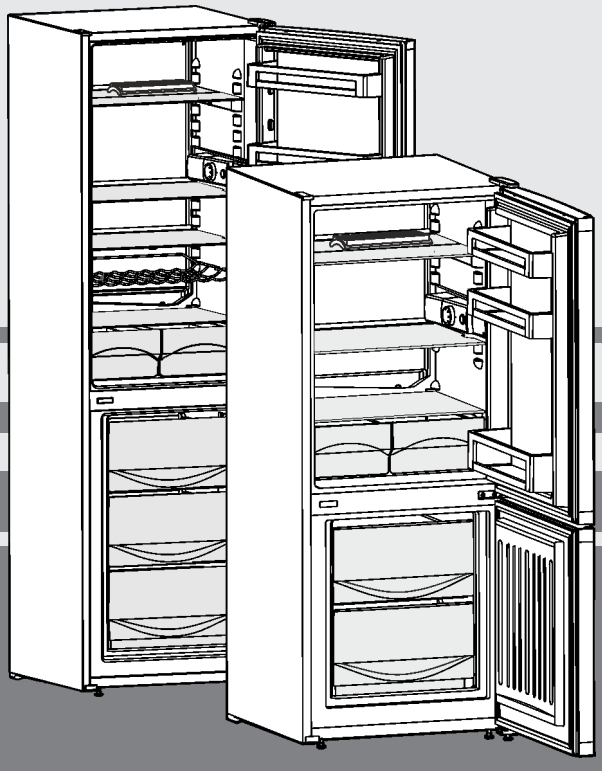

20241101 **7086293 - 00**

CU... 23../28../33..

LIEBHERR

Contents

1	**Appliance at a glance**	**2**
1.1	Description of appliance and equipment	2
1.2	Appliance range of use	2
1.3	Conformity	3
1.4	SVHC substances according to REACH regulation.	3
1.5	EPREL database	3
1.6	Spare parts	3
1.7	Installation dimensions	3
1.8	Saving energy	3
2	**General safety instructions**	**4**
3	**Controls and displays**	**5**
3.1	Operating and control elements	5
4	**Putting into operation**	**5**
4.1	Transporting the appliance	5
4.2	Installing the appliance	5
4.3	Changing over the door hinges	6
4.4	Sliding into the row of units	7
4.5	Disposing of packaging	8
4.6	Connecting the appliance	8
4.7	Switching on the appliance	8
5	**Control**	**8**
5.1	Refrigerator compartment	8
5.2	Freezer compartment	9
6	**Maintenance**	**10**
6.1	Manual defrosting	10
6.2	Cleaning the appliance	10
6.3	Replacing the interior lighting	11
6.4	Customer service	11
6.5	Energy efficiency class lighting	12
7	**Malfunctions**	**12**
8	**Decommissioning**	**13**
8.1	Switching off the appliance	13
8.2	Taking the appliance out of service	13
9	**Disposal**	**13**
9.1	Preparing appliance for disposal	13
9.2	Disposing of the appliance in an environmentally friendly manner	13

The manufacturer works constantly on the further development of all the types and models. Therefore please understand that we have to reserve the right to make design, equipment and technical modifications.

To get to know all the benefits of your new appliance, please read the information contained in these instructions carefully.

The instructions apply to several models. Differences may occur. Text relating only to specific appliances is marked with an asterisk (*).

Instructions are marked with a ▶, and results are marked with a ▷.

1 Appliance at a glance

1.1 Description of appliance and equipment

Note

▶ Place food inside the appliance as shown in the diagram. This allows the appliance to save energy during operation.

▶ Shelves, drawers and baskets are arranged for optimum energy efficiency on delivery.

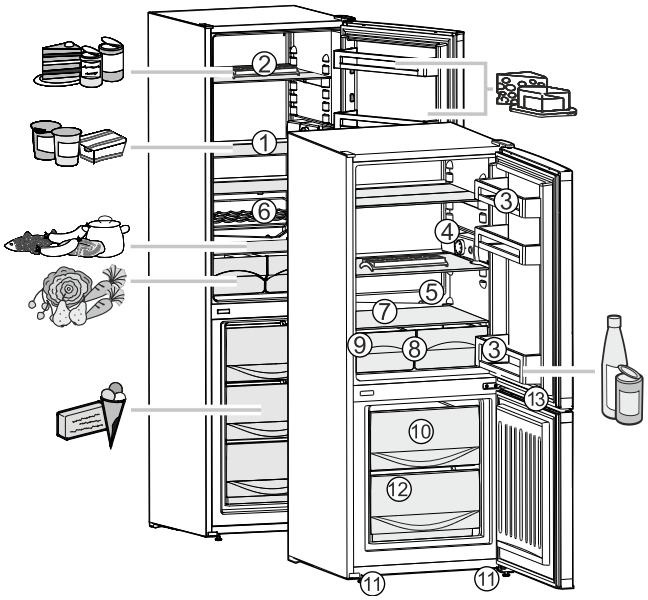

Fig. 1

(1) Adjustable shelves
(2) Egg tray
(3) Adjustable door shelf
(4) On/Off and temperature controller and interior lighting
(5) Defrost water drain
(6) Bottle rack
(7) Coldest area in the refrigerator compartment, for sensitive and perishable foodstuffs
(8) Vegetable, salad and fruit bins
(9) Type plate
(10) Deep freezer drawers
(11) Adjustable feet at the front
(12) Ice cube tray
(13) Recessed grip

1.2 Appliance range of use

Intended use

The appliance is only suitable for cooling food products in a domestic or household-like environment. This includes, for example, use:

- in staff kitchens, bed and breakfast establishments,
- by guests in country houses, hotels, motels and other accommodation,
- for catering and similar services in the wholesale trade.

The appliance is not suitable as a built-in unit.

All other types of use are not permitted.

Foreseeable misuse

The following applications are expressly forbidden:

- Storing and refrigerating medicines, blood plasma, laboratory preparations or similar substances and products based on the Medical Device Directive 2007/47/EC
- Use in areas at risk of explosions

Misusing the appliance may lead to damage to the goods stored or they may spoil.

Climate classifications

Depending on the climate classification the appliance is designed to operate in restricted ambient temperatures. The climate classification applying to your appliance is printed on the rating plate.

Note

▶ Keep to the specified ambient temperatures in order to guarantee that the appliance works properly.

Climate classification	for ambient temperatures of
SN	10 °C to 32 °C
N	16 °C to 32 °C
ST	16 °C to 38 °C
T	16 °C to 43 °C
SN-ST	10 °C to 38 °C
SN-T	10 °C to 43 °C

1.3 Conformity

The refrigerant circuit has been tested for leaks. The appliance complies with the applicable safety regulations and with the corresponding directives.

For the market:	EU	The appliance complies with directive 2014/53/EU.
For the market:	GB	The appliance complies with Radio Equipment Regulations 2017 SI 2017 No. 1206.

The full text of the EU Declaration of Conformity is available on the following website: www.Liebherr.com

1.4 SVHC substances according to REACH regulation

You can check whether your appliance contains SVHC substances according to REACH regulation at the following link: home.liebherr.com/de/deu/de/liebherr-erleben/nachhaltigkeit/umwelt/scip/scip.html

1.5 EPREL database

Details about energy labelling and ecodesign requirements will be available on the European product database (EPREL) from 1st March 2021. You can access the product database at the following link: https://eprel.ec.europa.eu/ You will be asked to enter the model ID. You can find the model ID on the nameplate.

1.6 Spare parts

The spare parts availability for functional parts and stockable parts of the equipment is 15 years.

1.7 Installation dimensions

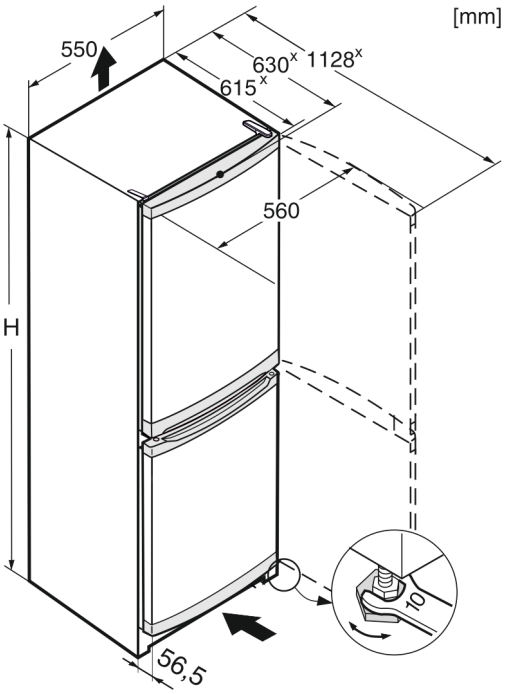

Fig. 2

	H
CU... 23..	1372
CU... 28..	1612
CU... 33../ CU 33..	1812
KGw 1855 2E	1812

x This dimension increases by 35 mm (see 4.2 Installing the appliance) with devices that use wall spacer brackets.

1.8 Saving energy

- Pay attention to good ventilation. Do not cover ventilation holes or grids.
- Do not place the appliance in direct sunlight or near radiators or similar sources of heat.
- If the appliance is placed directly next to an oven, the energy consumption may increase slightly. This is dependent on the service life and usage intensity of the oven.
- Energy consumption depends on the installation conditions, e.g. the ambient temperature (see 1.2 Appliance range of use) . A warmer ambient temperature can increase the energy consumption.
- Open the appliance for as short a time as possible.
- The lower the temperature is set the higher the energy consumption.
- Sort your food: home.liebherr.com/food.
- Keep all food properly packed and covered. This prevents frost from forming.
- Only take food out for as long as necessary so that it doesn't warm up too much.
- Inserting warm food: allow to cool down to room temperature first.
- Thaw frozen food in the refrigerator.
- If there is a thick layer of frost in the appliance: defrost the appliance.

Dust deposits increase energy consumption:

- For refrigerators with heat exchangers dust the metal grid on the back of the appliance once a year.

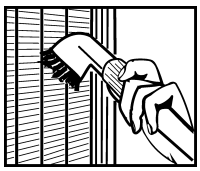

2 General safety instructions

Please keep these operating instructions in a safe place so you can refer back to them at any time.

If you pass the appliance on, please hand these operating instructions to the next user.

Read these operating instructions carefully before use to ensure safe and correct use of the appliance. Follow the instructions, safety instructions and warning messages included at all times. They are important for ensuring you can operate and install the appliance safely and without any problems.

Danger for the user:

- This device can be used by children and people with impaired physical, sensory or mental abilities or with a lack of experience and knowledge provided that they are supervised or have received instruction in the safe use of this device, and about the resulting hazards.
  Children must not play with this appliance. Cleaning and user maintenance work must not be carried out by children without adult supervision. Children aged between 3 and 8 are allowed to load and unload the appliance. Children below the age of 3 must be kept away from the appliance unless they are under continuous adult supervision.
- The socket must be easily accessible so that the appliance can be disconnected quickly from the electricity in an emergency. It must not be located in the area behind the appliance.
- When disconnecting the appliance from the supply, always take hold of the plug. Do not pull the cable.
- In the event of a fault pull out the mains plug or deactivate the fuse.
- Do not damage the mains power cable. Do not operate the appliance with a defective mains power cable.
- Repairs, interventions on the appliance and the replacement of mains connection line may only be carried out by AfterSales Service or other suitably trained specialist personnel.
- Only assemble, connect and dispose of the appliance according to the instructions.

Fire hazard:

- The coolant used (information on the model plate) is ecofriendly but also flammable. Any leaking coolant may ignite.
  - Do not damage the refrigerant circuit pipes.
  - Do not handle ignition sources inside the appliance.
  - Do not use electrical appliances inside the appliance (e.g. steam cleaners, heaters, ice cream makers, etc.).
  - If the refrigerant leaks: remove any naked flames or ignition sources from the vicinity of the leakage point. Properly air the room. Inform customer services.
- Do not store explosives or sprays using combustible propellants such as butane, propane, pentane, etc. in the appliance. To identify these spray cans, look for the list of contents printed on the can, or a flame symbol. Gases possibly escaping may ignite due to electrical components.
- Keep burning candles, lamps and other items with naked flames away from the appliance so that they do not set the appliance on fire.
- Please be sure to store alcoholic drinks or other packaging containing alcohol in tightly closed containers. Any alcohol that leaks out may be ignited by electrical components.

Danger of tipping and falling:

- Do not misuse the plinth, drawers, doors etc. as a step or for support. This applies particularly to children.

Danger of food poisoning:

- Do not consume food which has been stored too long.

Danger of frostbite, numbness and pain:

- Avoid prolonged skin contact with cold surfaces or refrigerated/frozen goods or take protective measures, e.g wear gloves.

Danger of injury and damage:

- Hot steam can lead to injury. Do not use electrical heating or steam cleaning equipment, open flames or defrosting sprays to defrost.
- Do not use sharp implements to remove the ice.

*** Depending on model and options**

Risk of crushing:

- Do not hold the hinge when opening and closing the door. Fingers may get caught.

Symbols on the appliance:



This symbol may be located on the compressor. It relates to the oil in the compressor and makes reference to the risk that: Swallowing or inhaling can be fatal. This advice is only relevant to recycling. There is no danger in normal operation.



This symbol is located on the compressor and indicates the danger of flammable materials. Do not remove the sticker.



This or a similar sticker may be located on the rear of the appliance. This sticker indicates that there are vacuum insulation panels (VIP) or perlite panels in the door and/or housing. This advice is only relevant to recycling. Do not remove the sticker.

Please note the warning messages and other specific advice in the other chapters:

⚠	DANGER	indicates an immediately hazardous situation which will lead to death or serious injuries if it is not avoided.
⚠	WARNING	indicates a hazardous situation which may lead to death or serious injuries if it is not avoided.
⚠	CAUTION	indicates a hazardous situation which may lead to minor or moderate injuries if it is not avoided.
	NOTICE	indicates a hazardous situation which may lead to damage to property if it is not avoided.
	Note	indicates useful instructions and tips.

3 Controls and displays

3.1 Operating and control elements

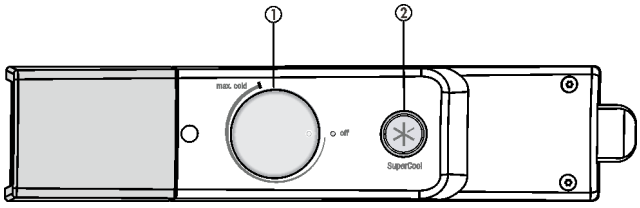

Fig. 3

(1) Temperature control **(2)** SuperCool button

4 Putting into operation

4.1 Transporting the appliance

▶ Transport the appliance only in suitable packaging.
▶ Transport the appliance upright.
▶ Do not transport the appliance on your own.

4.2 Installing the appliance

WARNING
Fire hazard due to dampness!
If live parts or the mains lead become damp this may cause short circuits.
▶ The appliance is designed for use in enclosed areas. Do not operate the appliance outdoors or in areas where it is exposed to splash water or damp conditions.

WARNING
Danger of fire due to incorrect positioning!
If the mains cable or plug touches the back of the appliance, the vibration can damage the mains cable or the plug resulting in a short circuit.
▶ Make sure the mains cable is not trapped under the appliance when you position the appliance.
▶ Stand the appliance so that it is not touched by connectors or main cables.
▶ Do not connect any appliances to sockets in the area of the back of the appliance.
▶ Do **not** place and operate multi-sockets/power distributors and other electronic devices (such as halogen transformers) at the back of the appliances.

WARNING
Leaking coolant and oil!
Fire. The coolant contained in the appliance is eco-friendly, but also flammable. The oil contained in the appliance is flammable. Escaping coolant and oil can ignite if the concentration is high enough and in contact with an external heat source.
▶ Do not damage the pipelines of the coolant circuit and the compressor.

WARNING
Fire hazard and danger of damage!
▶ Do not place appliances emitting heat e.g. microwaves, toasters etc. on the appliance!

NOTICE
Covered vents!
Damage. Appliance can overheat, which can reduce the service life of various parts of the appliance and lead to operational impairments.
▶ Always make sure there is good ventilation.
▶ Always keep vents or ventilation grids in the appliance housing and in the kitchen furniture (fully integrated appliance) unobstructed.

NOTICE
Risk of damage due to condensate!
▶ Do not install the appliance directly alongside a further refrigerator/freezer.

Note
If multiple appliances are placed next to each other, allow a distance of 100 mm between the appliances. Condensation will build up between the side walls of the appliances if this distance is not maintained.

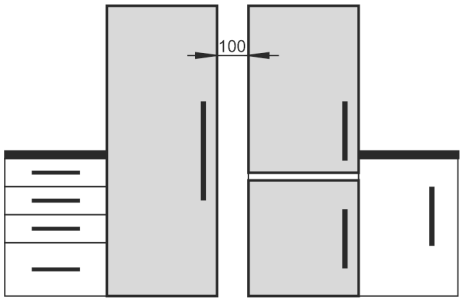

Fig. 4

- ❑ Before you connect the appliance, report any damage immediately to the delivery company.
- ❑ The floor of the installation site must be horizontal and even.
- ❑ Do not install the appliance in direct sunlight, next to an oven, radiator or similar.
- ❑ Install the appliance with the rear panel up against the wall and always use the supplied wall spacers (see below).
- ❑ Only ever move the appliance when it is empty.
- ❑ The surface supporting the appliance must be at the same level as the surrounding floor.
- ❑ Do not install the appliance on your own.
- ❑ The more refrigerant there is in the appliance, the larger the space that it is installed in must be. If the space is too small, any leak may create a flammable mixture of gas and air. For every 8 g of refrigerant, the installation space must be at least 1 m^3. Information regarding the coolant can be found on the type plate inside the appliance.

▶ Detach the connecting cable from the rear of the appliance, removing the cable holder at the same time because otherwise there will be vibratory noise!
▶ Remove the protective film from the outside of the appliance.*
▶ Remove the protective film from the decorative trims.
▶ Remove all transit supports.

To achieve the specified energy consumption, use the spacers, which are supplied with some appliances. This increases the appliance depth by approx. 35 mm. The appliance will work properly without the spacers but will consume slightly more energy.

▶ If your appliance comes with wall spacers, mount these on the back of the appliance, bottom left and right.

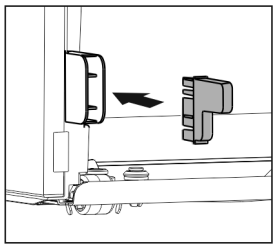

▶ Dispose of packaging material (see 4.5 Disposing of packaging) .

CAUTION
Risk of injury or damage from the appliance tipping or the door falling open!
If the additional adjustable foot on the base support is not correctly positioned on the floor, there is a risk of the door falling open or the appliance tipping. This can lead to injury or property damage.
▶ Unscrew the additional adjustable foot on the support until it reaches the floor.
▶ Then turn it another 90°.

▶ Align the appliance so that it stands firmly and on a level by applying the accompanying spanner to the adjustable-height feet (A) and using a spirit level.
▶ Then support the door: Extend the adjustable foot at the turn hinge (B) until it rests on the floor and then make a further 90° turn.

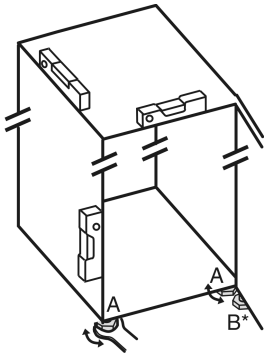

Note
▶ Clean the appliance (see 6.2 Cleaning the appliance) .

If the appliance is installed in a very damp environment, condensate may form on the outside of the appliance.
▶ Always see to good ventilation at the installation site.

4.3 Changing over the door hinges

You can change over the door hinges if necessary.

Ensure that the following tools are to hand:
- ❑ Torx® 15
- ❑ Torx® 20
- ❑ Screwdriver
- ❑ Cordless screwdriver, if necessary
- ❑ Second person for fitting work, if needed

4.3.1 Detaching the upper door

Note
▶ Remove any food from the door racks before removing the door, so that no food falls out.

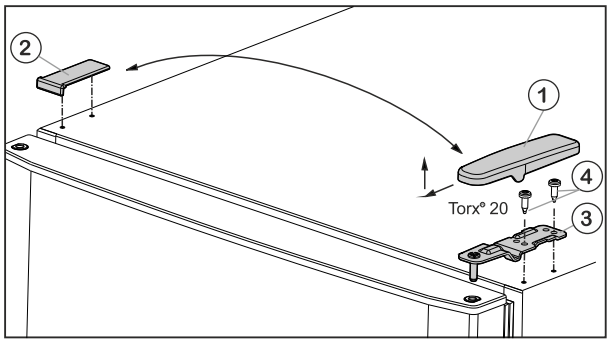

Fig. 5

▶ Pull off the cover *Fig. 5 (1)* forwards and upwards.
▶ Lift off the cover *Fig. 5 (2)*.

CAUTION
Risk of injury if the door tips!
▶ Take good hold of the door.
▶ Set down the door carefully.

▶ Unscrew the upper turn hinge *Fig. 5 (3)* (2 x Torx® 20) *Fig. 5 (4)* and lift it off.
▶ Lift up the upper door and set it aside.

4.3.2 Detaching the lower door

▶ Open the lower door.

* Depending on model and options

CAUTION
Risk of injury if the door tips!
- ▶ Take good hold of the door.
- ▶ Set down the door carefully.

- ▶ Unscrew the fastening screws *Fig. 6 (11)* (2 x Torx® 20) and pull the centre bearing block out of the lower door.
- ▶ Remove plastic washer *Fig. 6 (10)* .
- ▶ Lift up the door and set it aside.

4.3.3 Transferring the middle bearing elements

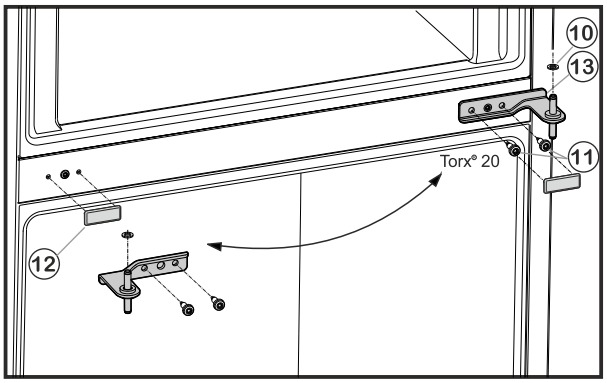

Fig. 6

- ▶ Remove the cover *Fig. 6 (12)* carefully.
- ▶ Re-install the cover *Fig. 6 (12)* on the opposite side.

4.3.4 Transferring the lower bearing elements

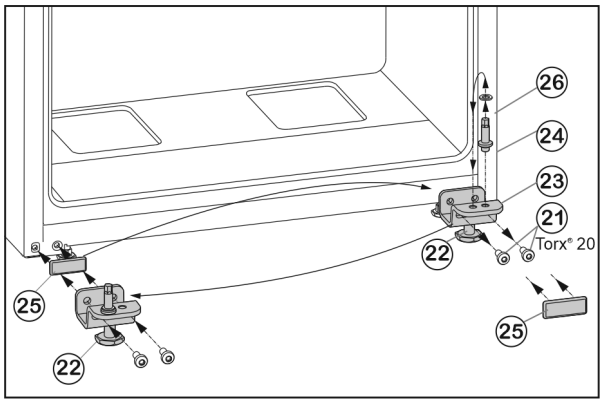

Fig. 7

- ▶ Unscrew fastening screws *Fig. 7 (21)* .
- ▶ Remove the lower bearing block *Fig. 7 (23)*, complete with bearing bolt *Fig. 7 (24)*, washer *Fig. 7 (26)* and adjustable foot *Fig. 7 (22)*.
- ▶ Unscrew the bearing bolt *Fig. 7 (24)*, complete with washer *Fig. 7 (26)*, re-locate it into the mounting hole on the opposite side of the bearing block and tighten again.
- ▶ Carefully remove the cover plate *Fig. 7 (25)* and re-locate it to the other side.
- ▶ Fasten the lower bearing block *Fig. 7 (23)*, complete with bearing bolt *Fig. 7 (24)*, washer *Fig. 7 (26)* and adjustable foot *Fig. 7 (22)* to the new hinge side, with the help of a cordless screwdriver if necessary, and **tighten (with 4 Nm)** once again.

4.3.5 Fitting the lower door

- ▶ Lower the bottom door onto the bearing bolt *Fig. 7 (24)*.
- ▶ Close the door.
- ▶ Insert the centre bearing block *Fig. 6 (13)* turned through 180° into the lower door and fasten firmly **(with 4 Nm)** to the new hinge side with the fastening screws *Fig. 6 (11)* (2 x Torx® 20).
- ▶ Refit plastic washer *Fig. 6 (10)*.

4.3.6 Fitting the upper door

- ▶ Set the upper door down on the centre bearing block *Fig. 6 (13)*.
- ▶ Insert the upper turn hinge *Fig. 5 (3)* in the door on the new hinge side.
- ▶ Screw in the upper bearing block **tightly (with 4 Nm)** (2 x Torx® 20) *Fig. 5 (4)*. Use a cordless screwdriver if necessary.
- ▶ Fit the cover *Fig. 5 (1)* on the opposite side by sliding it rearwards and latching it into place.
- ▶ Press the cover *Fig. 5 (2)* on the opposite side down into place until it latches.
- ▶ Unscrew the adjustable foot *Fig. 7 (22)* on the lower bearing block *Fig. 7 (23)* until it reaches the floor.

WARNING
Danger of injury due to door falling out!
If the bearing parts are not screwed on tightly enough, the door may fall out. This can result in serious injuries. In addition, the door may not close with the result that the appliance does not cool properly.
- ▶ Screw the bearing brackets on firmly with 4 Nm.
- ▶ Check all screws and retighten them if necessary.

4.4 Sliding into the row of units

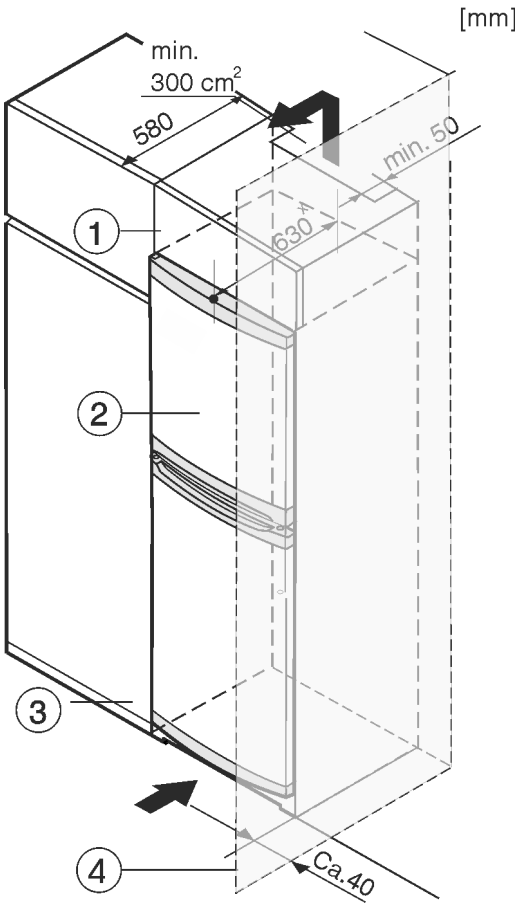

Fig. 8

(1) Top cupboard
(2) Appliance
(3) Kitchen cabinet
(4) Wall

x For appliances with supplied wall spacers, the dimension must be increased by 35 mm (see 4.2 Installing the appliance) .

The appliance can be built into kitchen units. A top cupboard *Fig. 8 (2)* can be added above the appliance in order to bring the appliance *Fig. 8 (1)* up to the height of the fitted kitchen units.

When fitting kitchen cupboards around the appliance (max. depth 580 mm), you can install the appliance directly next to the kitchen cupboard *Fig. 8 (3)*. The appliance protrudes 34 mm [x] to the side and 50 mm [x] in the centre of the appliance in relation to the kitchen cupboard front.

NOTICE
Danger of overheating due to insufficient air ventilation!
The compressor may be damaged if there is insufficient air ventilation.
▶ Take care to ensure adequate air ventilation.
▶ Observe the ventilation requirements.

Ventilation requirements:

- At the back of the top cupboard, there must be a ventilation shaft at least 50 mm deep across the top cupboard's entire width.
- The ventilation gap cross-section under the ceiling must be at least 300 cm^2.
- The wider the ventilation clearance, the more efficiently the appliance will run.

If the appliance is set up with the hinges next to a wall *Fig. 8 (4)*, the distance between the appliance and the wall must be at least 40 mm. This is how far the handle protrudes when the door is open.

4.5 Disposing of packaging

WARNING
Danger of suffocation due to packing material and plastic film!
▶ Do not allow children to play with packing material.

The packaging is made of recyclable materials:

- corrugated board/cardboard
- expanded polystyrene parts
- polythene bags and sheets
- polypropylene straps
- nailed wooden frame with polyethylene panel*

▶ Take the packaging material to an official collecting point.

4.6 Connecting the appliance

NOTICE
Danger of damage to incorrect connection!
Damage to the appliance.
▶ Do not connect the appliance to a stand-alone inverter, e.g. solar power systems and petrol generators.

WARNING
Danger of fire due to incorrect connection!
Burns.
Damage to the appliance.
▶ Do not use an extension cable.
▶ Do not use distributor blocks.

The type of current (alternating current) and voltage at the installation site have to conform with the data on the type plate (see 1 Appliance at a glance) .

The socket must be properly earthed and fused. The tripping current for the fuse must be between 10 A and 16 A.

The socket must be easily accessible so that the appliance can be quickly disconnected from the supply in an emergency. It must be outside the area of the rear of the appliance.
▶ Check the electrical connection.
▶ Plug in the power plug.



4.7 Switching on the appliance

Switch the appliance on about 2 hours before starting to stock it with any frozen goods.
▶ Turn the temperature controller *Fig. 3 (1)* clockwise to the position of the middle temperature point between **off** and **max cold** .
▷ The interior lighting is on.

5 Control

5.1 Refrigerator compartment

The natural circulation of air in the refrigerator compartment results in zones differing in temperature. It is coldest directly above the vegetable drawers and at the rear wall. It is warmest at the top front of the compartment and in the door.

5.1.1 Refrigerating food

▶ Store perishable foods such as ready-to-eat meals, meat and sausages in the coldest area. Place butter and preserves in the top area and in the door. (see 1 Appliance at a glance)
▶ Use reuseable plastic, metal, aluminium, glass containers and foil wrap to store food.
▶ Always store raw meat and fish in clean, sealed containers on the bottom shelf of the refrigerator, to prevent them coming into contact with or dripping onto other foods.
▶ Foods that easily absorb or give off smell or taste, as well as liquids, should be stored in sealed containers or covered.
▶ Use the front area of the base shelf only to temporarily set down refrigerated foods, for example while rearranging or sorting the contents. Remember not to leave refrigerated foods here as they could shift to the back or tip over when you close the door.
▶ Do not pack foods too closely together, as the air needs to circulate.

5.1.2 Setting the temperature

The temperature is adjustable clockwise between "off" and "max cold" (coldest temperature, greatest cooling capacity).

We recommend the middle control position, which ensures an average cold room temperature of approx. 5 °C.

An average temperature of about –18 °C is then set in the freezing compartment.

If frozen food is being stored and low freezing temperatures are to be ensured, it is recommended to adjust the temperature control setting from the middle position to "max cold" . The "max cold" setting allows the coldest zone in the refrigerator to reach temperatures below 0 °C.
▶ Turn temperature control *Fig. 3 (1)*.

The temperature depends on the following factors:

- How often the door is opened
- How long the door is open for
- The room temperature of the installation site
- The type, temperature and amount of frozen items

▶ If necessary, adjust the temperature with the control.

5.1.3 SuperCool function

This function ensures low temperatures in the freezer compartment.

Activating SuperCool function

At room temperatures of 15 °C or below, SuperCool is automatically activated. When SuperCool is activated, the SuperCool button lights up.

If you want to achieve lower temperatures in the freezer compartment, then you can also activate SuperCool manually:

▶ Press the SuperCool (see Fig. 3) button.
▷ The SuperCool button lights up.

Deactivating SuperCool function

SuperCool is automatically deactivated at room temperatures of more than 15 °C. When SuperCool is deactivated, the SuperCool button does not light up.

If you have activated SuperCool manually, then SuperCool is automatically deactivated after 70 hours. However, you can also deactivate SuperCool manually at any time:

▶ Press and hold the SuperCool (see Fig. 3) button for 3 seconds.

Note
At room temperatures of 15 °C or below, SuperCool is activated automatically if SuperCool has not been activated before. When SuperCool is automatically activated, the SuperCool button lights up. If SuperCool has been activated automatically, the function cannot be deactivated manually.

5.1.4 Shelves

Moving or removing shelves

The shelves are prevented from being pulled out accidentally by pull out stops.

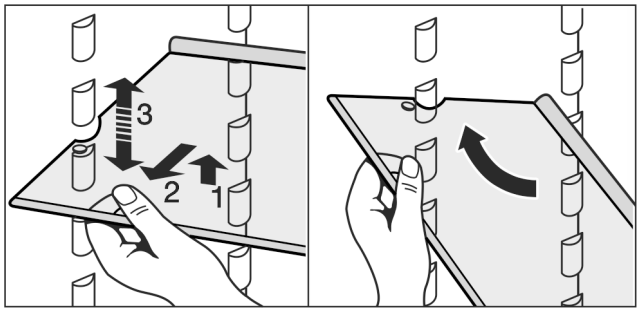

Fig. 9

▶ Lift the shelf and pull forward a little.
▶ Adjust the height of the shelf. To do this move the slots along the supports.
▶ In order to remove the shelf fully, place it at a slant and pull out towards the front.
▶ Insert shelf with the raised edge pointing upwards at the back.
▷ The food does not freeze onto the rear wall.

Dismantling shelves

▶ The shelves can be dismantled for cleaning.

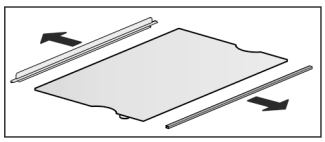

5.1.5 Door racks

Moving the storage rack

▶ Remove storage rack according to illustration.

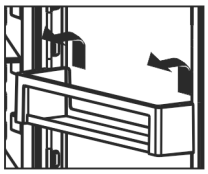

5.2 Freezer compartment

You can store frozen food, make ice cubes and freeze fresh food in the freezer compartment.

5.2.1 Freezing food

The rating plate indicates the maximum quantity of fresh food you can freeze within 24 hours (see 1 Appliance at a glance) under “Freezing capacity ... kg/24h”.

Each drawer can hold a max. of 25 kg of frozen food.

The shelves can each be loaded with 35 kg of frozen food.

A vacuum is generated after the door is closed. After closing the door, wait for about 1 minute and then it opens more easily.

CAUTION
Risk of injury due to broken glass!
Bottles and cans containing drinks may burst when being frozen. This applies particularly to sparkling drinks.
▶ Do not freeze bottles and cans containing drinks!

▶ 24 hours before freezing food, set the temperature to a mid to cold position
▶ Switching SuperCool on: (see Activating SuperCool function) .
▷ The freezer temperature will drop, and the appliance will operate at the maximum refrigerating capacity.

So that the food is rapidly frozen through to the core, do not exceed the following quantities per pack

- Fruit, vegetables up to 1 kg
- Meat up to 2.5 kg

▶ Pack the food in portions in freezer bags, reusable plastic, metal or aluminium containers
▶ Spread the food out in the bottom drawer and on the compartment bottom, and do not allow it to come into contact with food that is already frozen, to prevent this defrosting.
▶ Reset the temperature controller 24 hours after inserting the food.
When the room temperature is higher than 15 °C:
▶ SuperCool is deactivated automatically after 70 hours. However, you can also deactivate SuperCool manually at any time (see Deactivating SuperCool function) .
▶ Press and hold the SuperCool (see Fig. 3) button for 3 seconds.

5.2.2 Storage life

Standard values for the storage life of various types of food in the freezer compartment:	
Ice-cream	2 to 6 months
Sausage, ham	2 to 6 months
Bread, bakery products	2 to 6 months
Game, pork	6 to 10 months
Fatty fish	2 to 6 months

Standard values for the storage life of various types of food in the freezer compartment:	
Lean fish	6 to 12 months
Cheese	2 to 6 months
Poultry, beef	6 to 12 months
Vegetables, fruit	6 to 12 months

The values indicated for storage life are standard ones.

5.2.3 Thawing food

- in the refrigerator compartment
- in a microwave oven
- in a conventional or fan oven
- at room temperature

▶ Remove only as much food as is required. Use thawed food as quickly as possible.
▶ Food once thawed should be re-frozen only in exceptional cases.

5.2.4 Drawers

▶ To store frozen food directly on the shelves pull the drawer forward and lift it out.



5.2.5 Shelves

Moving shelves

▶ To remove the shelf: lift up at the front and pull out.
▶ To put the shelf back: simply push in as far as it will go.

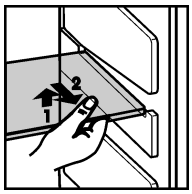

5.2.6 VarioSpace

You can remove the shelves and drawers. This leaves more room for larger food items such as poultry, meat, large game and tall baked goods, which can be frozen whole before further preparation.

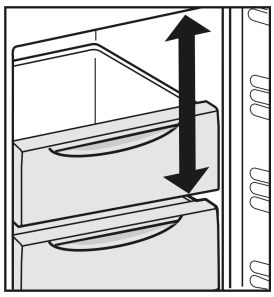

▶ Each drawer can hold max. 25 kg of frozen food.
▶ The shelves can each be loaded with 35 kg of frozen food.

6 Maintenance

6.1 Manual defrosting

Fridge compartment:

The **fridge compartment** defrosts automatically. The defrosted water is evaporated by the heat of the compressor. Water drops or a thin layer of frost or ice can form on the back wall; this is a completely normal part of the machine's function.

▶ Regularly clean the drain opening to allow the water to flow away (see 6.2 Cleaning the appliance) .

Freezer compartment:

A layer of frost or ice can build up in the **freezer compartment** after a long period of operation.

The layer of frost or ice builds up faster if the appliance is opened often or if the food is warm when placed inside. However, a thick layer of ice will increase the appliance's energy consumption. You should therefore defrost the appliance regularly.

Thawing process:

WARNING
Improper defrosting of the appliance!
Injuries and damage.
▶ Do not use mechanical equipment or other methods to speed up the defrosting process other than those recommended by the manufacturer.
▶ Do not use electrical heating or steam-cleaning appliances, naked flames or defroster sprays to defrost.
▶ Do not use sharp objects to remove ice.

▶ Switch off the appliance.
▶ Pull out the power plug or switch off the fuse.
▶ If possible, put the frozen goods in the freezer drawer, wrapped in newspaper or a blanket, and store in a cool place.
▶ Place a pan with hot, not boiling water on a middle shelf.

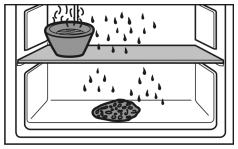

▷ Defrosting is speeded up.
▶ Leave the door of the appliance open while defrosting.
▶ Remove detached pieces of ice.
▶ If necessary, pick up defrost water several times, using a sponge or cloth.
▶ Clean the appliance (see 6.2 Cleaning the appliance) .

6.2 Cleaning the appliance

Clean the appliance regularly.

WARNING
Risk of injury and damage as a result of hot steam!
Hot steam can lead to burns and can damage the surfaces.
▶ Do not use any steam cleaners!

NOTICE
Incorrect cleaning damages the appliance!
▶ Do not use cleaning agents in concentrated form.
▶ Do not use any scouring or abrasive sponges or steel wool.
▶ Do not use any sharp or abrasive cleaning agents, nor any that contain sand, chloride or acid.
▶ Do not use chemical solvents.
▶ Do not damage or remove the type plate on the inside of the appliance. It is important for the customer service.
▶ Do not pull off, bend or damage cables or other components.
▶ Do not allow any cleaning water to enter the drain channel, ventilation grille or electrical parts.
▶ Please use soft cleaning cloths and a universal pH-neutral cleaning agent.
▶ Please use cleaning and care products suitable for contact with foodstuffs in the appliance interior.

▶ **Empty appliance.**
▶ **Pull out the power plug.**



▶ Clean the **vent grille** regularly.
▷ Dust deposits increase energy consumption.
▶ Clean **plastic outer and inner surfaces** with lukewarm water and a little washing-up liquid.
▶ Only use a soft clean cloth to wipe **side walls with a paint finish**. In the case of heavy soiling, use lukewarm water with neutral cleaning agent.
▶ Use only a soft clean cloth to wipe **door surfaces** with a paint finish. In the case of heavy soiling, use a little water or neutral cleaning agent. A micro-fibre cloth can be used optionally.*

Do not treat the lettering on the painted door surfaces with harsh, abrasive agents. Wipe off any dirt with a soft cloth and some water or neutral cleaner.*

▶ Clean **drain hole**: Remove deposits with a narrow instrument, e.g. a cotton bud.

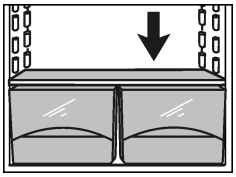

▶ Most of the **parts** can be dismantled for cleaning: see the relevant chapter.
▶ **Clean drawers** by hand with lukewarm water and a little washing up liquid.
▶ Clean **other items of equipment** by hand with lukewarm water and a little washing-up liquid.

After cleaning:
▶ Wipe dry the appliance and items of equipment.
▶ Connect the appliance and switch it on again.
When the temperature is sufficiently cold:
▶ Put the food back inside.

6.3 Replacing the interior lighting

An LED lamp is used as standard illumination for the interior space in the appliance.

The power supply (AC) and voltage at the operating point must comply with the details on the rating plate (see 1 Appliance at a glance) .

When an LED is used:

❑ Only use the original LED lamp from the manufacturer, max. 15 W. The lamp can be obtained from customer service or a specialist dealer (see 6.4 Customer service) .

WARNING
Risk of injury from LED light!
The light intensity of the LED lighting corresponds to risk group RG 2.
If the cover is removed:
▶ Do not look directly into the light at close quarters through optical lenses. Doing so may damage your eyes.

WARNING
Fire hazard from the LED light!
If different LED lights are used, there is a danger of overheating or fire.
▶ Use the manufacturer's original LED light.

If the lamp is faulty, replace it as follows:
▶ Switch the appliance off.
▶ Unplug the mains plug or switch the circuit breaker off.

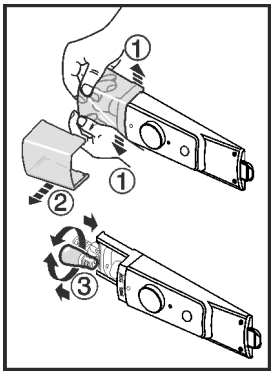

Fig. 10

▶ Push the lamp cover in and apart at the front *Fig. 10 (1)*, and remove to the side *Fig. 10 (2)* as shown in the illustration.
▶ Replace the lamp. *Fig. 10 (3)*
▶ Push the lamp cover on again and engage.

6.4 Customer service

First check whether you can rectify the fault yourself (see 7 Malfunctions) . If you cannot rectify the problem, contact Customer Services. You can find the address in the enclosed Customer Service Directory.

WARNING
Unprofessional repair!
Injuries.
▶ Have any repairs and action - not expressly specified - on the appliance and mains cable carried out by service personnel only. (see 6 Maintenance)
▶ A damaged mains cable may only be replaced by the manufacturer, the manufacturer's Customer Service or a similarly qualified person.
▶ In the case of appliances with an IEC connector, the change may be made by the customer.

▶ Read the appliance designation *Fig. 11 (1)*, service No. *Fig. 11 (2)* and serial No. *Fig. 11 (3)* off the model plate located inside the appliance on the left-hand side.

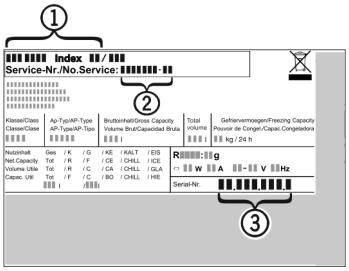

Fig. 11

▶ Notify the customer service, specifying the fault, appliance designation *Fig. 11 (1)*, service No. *Fig. 11 (2)* and serial No. *Fig. 11 (3)*.
▷ This will help us to provide you with a faster and more accurate service.
▶ Keep the appliance closed until the customer service arrives.
▷ The food will stay cool longer.
▶ Pull out the mains plug (not by pulling the connecting cable) or switch off the fuse.

*** Depending on model and options**

6.5 Energy efficiency class lighting

Lighting	
Energy efficiency class[1]	Light source
This product contains an energy efficiency class G light source	LED

[1] *The appliance may contain light sources with different energy efficiency classes. The lowest energy efficiency class is indicated.*

7 Malfunctions

Your appliance is designed and manufactured for a long life span and reliable operation. If a malfunction nonetheless occurs during operation, check whether it is due to a handling error. In this case you will have to be charged for the costs incurred, even during the warranty period. You may be able to rectify the following faults yourself:

Defect	Cause	Remedy
Appliance does not work.	→ The appliance is not switched on.	▶ Switching on the appliance.
	→ The power plug is not properly inserted in the wall socket.	▶ Check power plug.
	→ The fuse of the wall socket is not in order.	▶ Check fuse.
The compressor runs for a long time.	→ The compressor switches to a low speed when little cold is needed. Although the running time is increased as a result, energy is saved.	▶ This is normal in energy-saving models.
	→ SuperCool is activated.	▶ The compressor runs for longer in order to rapidly cool the food. This is normal.
A LED on the bottom rear of the appliance (at the compressor) flashes regularly every 15 seconds*.	→ The inverter is equipped with a diagnostic LED.	▶ The flashing is normal.
Excessive noise.	→ Due to the various speed steps, speed-regulated* compressors can generate different running noises.	▶ The sound is normal.
A bubbling and gurgling noise.	→ This noise comes from the refrigerant flowing in the refrigeration circuit.	▶ The sound is normal.
A quiet clicking noise.	→ The noise is produced whenever the refrigeration unit (motor) automatically switches on or off.	▶ The sound is normal.
A hum. It is briefly a little louder when the refrigeration unit (the motor) switches on.	→ The refrigeration increases automatically when the SuperCool function is activated, fresh food has just been placed in the appliance or the door has been left open for a while.	▶ The sound is normal.
	→ The ambient temperature is too high.	▶ Solution: (see 1.2 Appliance range of use)
Vibration noises	→ The appliance is not standing firmly on the floor. As a result objects and adjacent units start to vibrate when the refrigerator is running.	▶ Align the appliance using the adjustable feet. ▶ Keep bottles and jars apart.
The outer surfaces of the appliance are warm*.	→ The heat of the refrigeration circuit is used to prevent condensate from forming.	▶ This is normal.
The temperature is not cold enough.	→ The door of the appliance is not properly closed.	▶ Close the door of the appliance.
	→ Insufficient ventilation.	▶ Keep ventilation grille clear, and clean it.

*** Depending on model and options**

Defect	Cause	Remedy
	→ The ambient temperature is too high.	▶ Solution: (see 1.2 Appliance range of use) .
	→ The appliance was opened too frequently or for too long.	▶ Wait to see whether the appliance reaches the required temperature by itself. If not, please contact the after sales service (see 6 Maintenance) .
	→ The appliance is too close to a source of heat (stove, heater etc).	▶ Change the position of the appliance or the source of heat.
The internal light does not come on.	→ The appliance is not switched on.	▶ Switch the appliance on.
	→ The lamp (if the model comes with an LED lamp) is faulty.	**WARNING** Risk of injury from LED light! The light intensity of the LED lighting corresponds to risk group RG 2. If the cover is removed: ▶ Do not look directly into the light at close quarters through optical lenses. Doing so may damage your eyes. ▶ Change the lamp (see 6 Maintenance) .
With an ambient temperature below 15 °C the device is slightly warmed in places on the inner surface of the fridge compartment's right side wall.	→ This is a necessary part of the function.	▶ This is normal.
The backlight for the SuperCool button flashes.	→ The device is equipped with fault diagnostics.	▶ Contact customer service (see 6 Maintenance) .

8 Decommissioning

8.1 Switching off the appliance

▶ Turn temperature control *Fig. 3 (1)* to **off**.

8.2 Taking the appliance out of service

▶ Empty the appliance.
▶ Switch off the appliance (see 8 Decommissioning) .
▶ Remove mains connector.
▶ Clean the appliance (see 6.2 Cleaning the appliance) .



▶ Leave the door open to prevent odour.

9 Disposal

9.1 Preparing appliance for disposal



Liebherr uses batteries in some of its appliances. In the EU, for environmental reasons, legislation obliges the end user to remove these batteries before disposing of old appliances. If your appliance contains batteries, a corresponding notice is attached.

Lamps — If you can remove the lamps yourself without destroying them, also remove these before disposal.

▶ Take the appliance out of operation. (see 8.2 Taking the appliance out of service)
▶ Appliances with batteries: remove the batteries. For description, see **Maintenance** chapter.
▶ If possible: remove lamps without destroying them.

9.2 Disposing of the appliance in an environmentally friendly manner



The appliance still contains valuable materials and must be disposed of separately from unsorted municipal waste.





Dispose of batteries separately from the old appliance. To do this, you can return the batteries free of charge to retailers as well as recycling centres and collection centres for recyclable materials.

Lamps — Dispose of removed lamps via the respective collection systems.

Disposal

For Germany:*	You can dispose of the appliance free of charge via the class 1 collection containers at the local recycling and recyclable material collection centres. When purchasing a new fridge/freezer, if the sales area > 400 m^2, retailers will also take back the old appliance free of charge.*

WARNING
Leaking coolant and oil!
Fire. The coolant contained in the appliance is eco-friendly, but also flammable. The oil contained in the appliance is flammable. Escaping coolant and oil can ignite if the concentration is high enough and in contact with an external heat source.
▶ Do not damage the pipelines of the coolant circuit and the compressor.

▶ Observe the notes on transporting the appliance. (see 4.1 Transporting the appliance)
▶ Transport the appliance without damaging it.
▶ Dispose of batteries, lamps and the appliance according to the above specifications.

* Depending on model and options

Liebherr-Hausgeräte Marica EOOD
4202 Radinovo
Bezirk Plovdiv
Bulgarien

home.liebherr.com

tehnoteka

https://tehnoteka.rs

Ovaj dokument je originalno proizveden i objavljen od strane proizvođača, brenda Liebherr, i preuzet je sa njihove zvanične stranice. S obzirom na ovu činjenicu, Tehnoteka ističe da ne preuzima odgovornost za tačnost, celovitost ili pouzdanost informacija, podataka, mišljenja, saveta ili izjava sadržanih u ovom dokumentu.

Napominjemo da Tehnoteka nema ovlašćenje da izvrši bilo kakve izmene ili dopune na ovom dokumentu, stoga nismo odgovorni za eventualne greške, propuste ili netačnosti koje se mogu naći unutar njega. Tehnoteka ne odgovara za štetu nanesenu korisnicima pri upotrebi netačnih podataka. Ukoliko imate dodatna pitanja o proizvodu, ljubazno vas molimo da kontaktirate direktno proizvođača kako biste dobili sve detaljne informacije.

Za najnovije informacije o ceni, dostupnim akcijama i tehničkim karakteristikama proizvoda koji se pominje u ovom dokumentu, molimo posetite našu stranicu klikom na sledeći link:

https://tehnoteka.rs/p/liebherr-kombinovani-frizider-cue-2831-akcija-cena/