tehnoteka

https://tehnoteka.rs

Uputstvo za upotrebu (EN)

LIEBHERR kombinovani frižider CNd 5703

LIEBHERR



Tehnoteka je online destinacija za upoređivanje cena i karakteristika bele tehnike, potrošačke elektronike i IT uređaja kod trgovinskih lanaca i internet prodavnica u Srbiji. Naša stranica vam omogućava da istražite najnovije informacije, detaljne karakteristike i konkurentne cene proizvoda.

Posetite nas i uživajte u ekskluzivnom iskustvu pametne kupovine klikom na link:

https://tehnoteka.rs/p/liebherr-kombinovani-frizider-cnd-5703-akcija-cena/

User Guide

Quality, Design and Innovation

home.liebherr.com/fridge-manuals

LIEBHERR

Contents

1 Safety information and warnings..... 3
1.1 Intended use..... 3
1.2 Climate classes..... 3
1.3 User group..... 3
1.4 Installation and commissioning..... 3
1.5 Safe handling of the appliance..... 4
1.6 Cleaning..... 4
1.7 Faults, damage and repairs..... 4
1.8 Disposal..... 4
1.9 Conformity..... 4
1.10 SVHC substances in accordance with the REACH Regulation..... 4
1.11 EPREL database..... 4
1.12 Open source licences..... 4
1.13 Spare parts..... 4
1.14 Symbols on the appliance..... 5
1.15 Warning levels..... 5

2 Appliance at a glance..... 5
2.1 Scope of delivery..... 5
2.2 Overview of the appliance and equipment..... 5
2.3 SmartDevice..... 5
2.4 Appliance range of use..... 6
2.5 Conformity..... 6
2.6 SVHC substances according to REACH regulation. 6
2.7 EPREL database..... 6
2.8 Spare parts..... 6

3 Functionality of the Touch display..... 6
3.1 Navigation and symbol explanation..... 6
3.2 Menus..... 7
3.3 Sleep mode..... 7

4 Putting into operation..... 8
4.1 Switching on appliance (first use)..... 8
4.2 Starting the EasyTwist-Ice for the first time*..... 8

5 Storage..... 8
5.1 Information regarding storage..... 8
5.2 Fridge compartment..... 8
5.3 EasyFresh 8
5.4 Freezer compartment..... 9
5.5 Storage times..... 9

6 Saving energy..... 9

7 Controls..... 10
7.1 Controls and displays..... 10
7.1.1 Status display..... 10
7.1.2 Display symbols..... 10
7.2 Appliance functions..... 10
7.2.1 Notes on the appliance functions..... 10
Switching the appliance off and on..... 10
Switching temperature zone off and on..... 10
WiFi..... 11
Temperature..... 12
Temperature unit..... 12
D-Value*..... 12
SuperCool..... 13
PowerCool 13
SuperFrost..... 14
Start defrosting cycle..... 14
PartyMode 15
HolidayMode..... 15
SabbathMode..... 15
E-Saver 16
CleaningMode..... 16
Display brightness..... 17
Door alarm..... 17
Input lock..... 18
Device information..... 18
Software..... 18
Reminder..... 18
Demo mode..... 19
Resetting to factory settings..... 20
7.3 Messages..... 20
7.3.1 Overview of warnings..... 20
7.3.2 Ending warnings..... 20
7.3.3 Overview of reminders..... 21
7.3.4 Ending reminders..... 21

8 Features..... 21
8.1 Door rack..... 21
8.2 Shelves..... 23
8.3 Dividing shelf*..... 23
8.4 VarioSafe *..... 24
8.5 Drawers..... 26
8.6 Compartment lid for EasyFresh Safe..... 26
8.7 Glass shelves..... 27
8.8 EasyTwist-Ice*..... 27
8.9 VarioSpace..... 28
8.10 Bottle holder..... 29
8.11 Freezer pack*..... 29
8.12 FlexCube*..... 29

9 Maintenance..... 29
9.1 FreshAir carbon filter..... 29
9.2 Disassembling / assembling pull-out systems..... 30
9.3 Compartment lid for EasyFresh Safe..... 30
9.4 Defrosting the appliance..... 30
9.5 Cleaning the appliance..... 30

10 Customer help..... 33
10.1 Technical specifications..... 33
10.2 Operating noises..... 33
10.3 Technical fault..... 34
10.4 Customer Service..... 35
10.5 Model plate..... 35

11 Shutting down..... 35

12 Disposal..... 36

12.1 Preparing the appliance for disposal..... 36
12.2 Disposing of the appliance in an environmentally friendly manner..... 36

The manufacturer is continually working on the further development of all types and models. Please be aware that we reserve the right to make changes to the shape, equipment and technology.

Symbol	Explanation
	**Read instructions** Please read the information in these instructions carefully to understand all of the benefits of your new appliance.
	**Additional information on the Internet** The digital manual with additional information and in other languages can be found via the QR code on the front of the manual or by entering the service number at **home.liebherr.com/fridge-manuals**. The service number can be found on the serial tag: 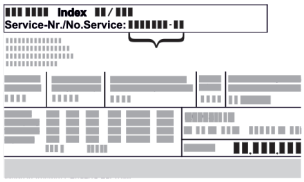 *Fig.* Example illustration
	**Check appliance** Check all parts for transport damage. If you have any complaints, please contact your agent or customer service.
	**Differences** These instructions apply to a range of models, so differences are possible. Sections that apply to certain models only are marked with an asterisk (*).
	**Instructions and results** Instructions are marked with a ▶. Results are marked with a ▷.
	**Videos** Videos about the appliances are available on the YouTube channels of Liebherr-Hausgeräte.

Open source licences:

The appliance contains software components that use open source licences. Information on the open source licences used can be found here: **home.liebherr.com/open-source-licences**

These operating instructions apply to:

CN...	50.. / 52.. / 57.. / 76.. / 77..
KGN...	52Z03 / 57Z03
KGN...	52Vc03 / 52Vd03 / 57Vc03 / 57Vd03 / 57Va03
KGN..	1863 / 2063
KGN	52Vc03
KGN	52Vb03

Note
If your appliance has an N in its appliance designation, it is a NoFrost appliance.

1 Safety information and warnings

Keep this user information in a safe place so that you can refer to it at any time.

If you pass on the appliance, pass this user information on to subsequent owners.

To use the appliance properly and safely, read this user information carefully before installation and use. Always follow the instructions, safety instructions and warnings contained therein. They are important so that you can install and operate the appliance safely and properly.

1.1 Intended use

This appliance is intended for household use and similar applications such as:

- in staff kitchen areas in shops, offices and other work areas
- in agricultural environments and by guests in hotels, motels and other accommodation
- in bed and breakfasts
- in catering and similar wholesale operations

All other types of application are impermissible.

1.2 Climate classes

Depending on its climate class, the appliance is designed for operation within certain ambient temperature limits. The climate class for your appliance is printed on the type plate.

Note
▶ In order to guarantee fault-free operation comply with the specified ambient temperatures.

Climate class	for ambient temperatures from
SN	10 °C to 32 °C
N	16 °C to 32 °C
ST	16 °C to 38 °C
T	16 °C to 43 °C
SN-ST	10 °C to 38 °C
SN-T	10 °C to 43 °C

1.3 User group

- This appliance can be used by children aged from 8 years and above and persons with reduced physical, sensory or mental capabilities or lack of experience and knowledge if they have been given supervision or instruction concerning use of the appliance in a safe way and understand the hazards involved.
- Children must not play with the appliance.
- Children must not carry out cleaning and user maintenance without supervision.
- Children aged from 3 to 8 years are allowed to load and unload refrigerating appliances.

1.4 Installation and commissioning

- Only set up and connect the appliance in accordance with the instructions in the user information.

- Do not close the ventilation openings in the appliance housing or in the installation housing.
- Do not damage the mains cable. The appliance must not be operated with a defective mains cable.
- Do not place portable multiple sockets or power supply units at the rear of the appliance.
- It must be easy to access the socket so that the appliance can be quickly disconnected from the power supply in case of an emergency. It must not be behind the appliance.

1.5 Safe handling of the appliance

- Do not store any explosive substances, such as aerosol containers with flammable propellant gas, in the appliance. These types of aerosol can be identified by the list of contents printed on it, or by a flame symbol. Any leaking gas may ignite due to electrical parts.
- Keep burning candles, lamps and other objects with naked flames away from the appliance, so that these do not set fire to the appliance.
- Alcoholic beverages and other containers bearing alcohol must be sealed tight for storage. Any leaking alcohol may ignite due to electrical parts.
- Avoid prolonged skin contact with cold surfaces or with cold/frozen food. Use gloves for protection, for example.
- The refrigerant contained (information on the type plate) is environmentally friendly but flammable. Leaking refrigerant may ignite.
  - Do not damage the refrigeration circuit.
  - Do not use any ignition sources inside the appliance.
  - Do not use electrical appliances inside the appliance (e.g. steam cleaners, heaters).
  - If the refrigerant leaks: remove any naked flames or ignition sources from the vicinity of the leakage point. Properly air the room. Inform customer service.
- Only open the door for a short time. This prevents the temperature inside the appliance from rising.
- Do not reach between the door and the appliance when opening and closing. Fingers may become trapped.
- The temperature in the warmest part of the appliance may be higher than the set temperature.

Appliances with water tank:

- Only fill the EasyTwist-Ice water tank with drinking water to avoid poisoning from contaminated water.*

1.6 Cleaning

- Regularly clean surfaces that come into contact with food.
- Clean the defrost water drain regularly.
- Do not use an electric heater or steam cleaner, naked flames or defrost spray to speed up the defrosting process.
- Do not remove the ice with sharp objects.

1.7 Faults, damage and repairs

- If the mains connection cable of the appliance is damaged, replace the mains connection cable.
- Repairs and interventions on the appliance may only be carried out by the customer service or by other qualified personnel trained for this purpose.
- In the event of malfunctions and appliance faults, pull out the mains plug or switch off the fuse. Always hold the plug when pulling out the mains plug. Never tug on the cable.

1.8 Disposal

- The appliance contains valuable materials and is marked with the appropriate symbol. (see 1.14 Symbols on the appliance)
  - Do not dispose of the appliance in the household waste.
  - Dispose of the appliance free of charge at your local recycling centre using the Class 1 collection containers.
  - When purchasing a new appliance, return the old appliance to the retailer free of charge.
  - Provide information about return options.
- Your appliance may contain personal data.
  - Delete personal data before disposal.
- The appliance contains refrigerant (information on the type plate) and oil. The refrigerant inside the appliance is environmentally friendly, but flammable. The oil it contains is also flammable. Escaping refrigerant and oil can ignite in high concentrations and in contact with an external heat source.
  - Do not damage the refrigeration circuit.
  - Only dispose of the appliance in accordance with the instructions in the user information.

1.9 Conformity

The coolant circuit has been tested for leak-tightness. The appliance complies with the relevant safety regulations and directives.

The full text of the EU Declaration of Conformity is available at the following web address: www.liebherr.com

1.10 SVHC substances in accordance with the REACH Regulation

You can use the following link to check whether your appliance contains SVHC substances in accordance with the REACH Regulation:

home.liebherr.com/en/en/liebherr-experience/sustainability/environment/scip/scip.html

1.11 EPREL database

From 1 March 2021, the information on energy labelling and eco-design requirements will be available in the European product database (EPREL). The product database can be accessed via the following link https://eprel.ec.europa.eu/. Here, you are asked to enter the model identifier. You will find the model identifier on the type plate.

1.12 Open source licences

The appliance contains software components that use open source licences. Information on the open source licences used can be found here:

home.liebherr.com/open-source-licences

1.13 Spare parts

The spare parts availability for functional parts and stockable parts of the equipment is 15 years.

* Depending on model and options

1.14 Symbols on the appliance

	This symbol may be found on the compressor. It pertains to the oil in the compressor and indicates the following danger: Can be fatal if swallowed or with penetration of the respiratory tract. This information is only significant for recycling. No risk exists with normal use. Do not remove this symbol.
	Warning: Fire hazard due to flammable substances. This symbol is located on the compressor and can also be found in other places on the appliance. This symbol warns of flammable substances. Do not remove this symbol.
	This or a similar symbol may be on the rear of the appliance. It indicates that there are vacuum insulation panels (VIP) or perlite panels in the door and/or housing. This information is only significant for recycling. Do not remove this symbol.
	This symbol is located on the type plate. It indicates that the appliance contains valuable materials and that you must not dispose of it with household waste. (see 1.8 Disposal)

1.15 Warning levels

DANGER	Identifies an immediately dangerous situation that will result in death or serious bodily injuries if it is not prevented.
WARNING	Identifies a dangerous situation that could result in death or serious bodily injury if it is not prevented.
CAUTION	Identifies an immediately dangerous situation that could result in slight or moderate injuries if it is not prevented.
ATTENTION	Identifies a hazardous situation that could result in property damage if it is not prevented.
Note	Identifies useful information and tips.

2 Appliance at a glance

2.1 Scope of delivery

Check all parts for transport damage. Contact your dealer or customer service in the event of complaints. (see 10.4 Customer Service)

Your new appliance comes with the following parts:

- Standalone appliance
- Features (depending on the model)
- Installation materials (depending on the model)
- “Quick Start Guide”
- Service Brochure

2.2 Overview of the appliance and equipment

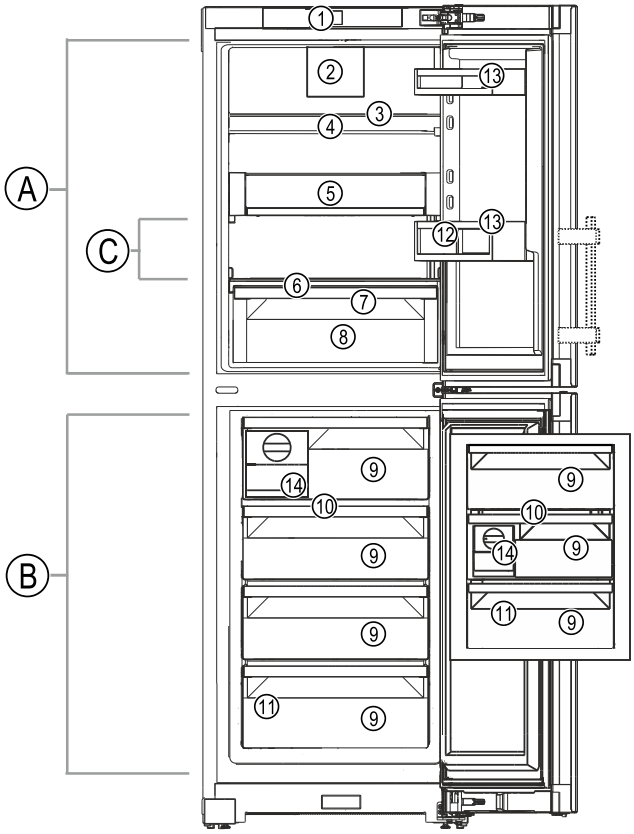

Fig. 1 Example illustration

Temperature range

(A) Fridge section
(B) Freezer section
(C) Coldest area

Equipment

(1) Controls
(2) Fan with FreshAir activated charcoal filter
(3) Divisible shelf*
(4) Shelf
(5) VarioSafe*
(6) Compartment lid for EasyFresh Safe
(7) Defrost water drain
(8) EasyFresh Safe
(9) Drawer
(10) VarioSpace
(11) Type plate
(12) Bottle holder
(13) Door rack
(14) EasyTwist-Ice*

2.3 SmartDevice

SmartDevice is the networking solution for your fridge-freezer.

If your appliance SmartDevice-enabled or compatible, you can quickly and easily connect your appliance to your WiFi. With the SmartDevice app, you can operate your appliance from a mobile device. Additional functions and setting options are available in the SmartDevice SmartDevice app.

SmartDevice-compatible appliance:	Your appliance is compatible for use with the SmartDeviceBox. You must first purchase and install the SmartDeviceBox. In order to connect your appliance to the WiFi, you need to download the SmartDevice app.
More information about SmartDevice:	**smartdevice.liebherr.com**

*** Depending on model and options**

Purchasing the SmartDeviceBox in the Liebherr-Hausgeräte store: **home.liebherr.com/shop/de/deu/smartdevicebox.html**

Downloading the SmartDevice app:

After installing and configuring the SmartDevice app, you can connect your appliance to your Wi-Fi (see WiFi) using the SmartDevice app and the appliance's Wi-Fi function.

Note
The SmartDevice function is not available in the following countries: Russia, Belarus, Kazakhstan.

You cannot use the SmartDeviceBox.

2.4 Appliance range of use

Intended use

The appliance is only suitable for cooling food products in a domestic or household-like environment. This includes, for example, use:

- in staff kitchens, bed and breakfast establishments,
- by guests in country houses, hotels, motels and other accommodation,
- for catering and similar services in the wholesale trade.

The appliance is not suitable as a built-in unit.

All other types of use are not permitted.

Foreseeable misuse

The following applications are expressly forbidden:

- Storing and refrigerating medicines, blood plasma, laboratory preparations or similar substances and products based on the Medical Device Directive 2007/47/EC
- Use in areas at risk of explosions

Misusing the appliance may lead to damage to the goods stored or they may spoil.

Climate classifications

Depending on the climate classification the appliance is designed to operate in restricted ambient temperatures. The climate classification applying to your appliance is printed on the rating plate.

Note
▶ Keep to the specified ambient temperatures in order to guarantee that the appliance works properly.

Climate classification	for ambient temperatures of
SN	10 °C to 32 °C
N	16 °C to 32 °C
ST	16 °C to 38 °C
T	16 °C to 43 °C
SN-ST	10 °C to 38 °C
SN-T	10 °C to 43 °C

2.5 Conformity

The refrigerant circuit has been tested for leaks. The appliance complies with the applicable safety regulations and with the corresponding directives.

The full text of the EU Declaration of Conformity is available on the following website: www.Liebherr.com

2.6 SVHC substances according to REACH regulation

You can check whether your appliance contains SVHC substances according to REACH regulation at the following link: home.liebherr.com/de/deu/de/liebherr-erleben/nachhaltigkeit/umwelt/scip/scip.html

2.7 EPREL database

Details about energy labelling and ecodesign requirements will be available on the European product database (EPREL) from 1st March 2021. You can access the product database at the following link: https://eprel.ec.europa.eu/ You will be asked to enter the model ID. You can find the model ID on the nameplate.

2.8 Spare parts

The spare parts availability for functional parts and stockable parts of the equipment is 15 years.

3 Functionality of the Touch display

You operate your appliance using the Touch display. You select appliance functions in the Touch display (hereafter referred to as display) by tapping them. If you do not perform any action on the display for 10 seconds, the display either jumps back to the higher-level menu or directly to the status display.

3.1 Navigation and symbol explanation

In the illustrations, different symbols are used to navigate the display. The following table describes these symbols.

Symbol	Description
	**Press the Next navigation arrow:** Navigates to the next option in the menu.
	**Press the Back navigation arrow:** Jumps back one option in the menu.
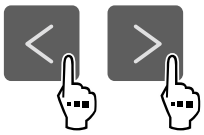	**Press the navigation arrow several times in succession:** Navigates in the menu to the desired function.
	**Press the Confirm symbol:** Activates/deactivates function. Opens submenu.

Symbol	Description
	**Press the Confirm symbol together with the back icon:** Jumps back one menu level.
	**Arrow with clock:** It takes more than 10 seconds for the following message to appear in the display.
	**Arrow with a time indication:** It takes the specified amount of time until the following message appears in the display.
	**“Open Settings menu” symbol:** Navigates to the Settings menu and opens the settings menu. If necessary: Navigate to the desired function in the Settings menu. (see 3.2.1 Opening the Settings menu)
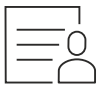	**“Open Advanced menu” symbol:** Navigates to the Advanced menu and opens the advanced menu. If necessary: Navigate to the desired function in the Advanced menu. (see 3.2.2 Opening the Advanced menu)
No action for 10 seconds	If you do not perform any action on the display for 10 seconds, the display either jumps back to the higher-level menu or directly to the status display.
Close the door and open it again.	If you close the door and immediately open it again, the display jumps directly back to the status display.

Note: Illustrations of the display are shown in the English version.

3.2 Menus

The appliance functions can be found in various menus.

Menu	Description
Main menu	When you switch the appliance on, you are automatically in the main menu. From here you can navigate to the most important appliance functions, to the Settings menu and to the Advanced menu.
 Settings menu	The Settings menu contains additional appliance functions for setting up your appliance. (see 3.2.1 Opening the Settings menu)
Advanced menu	The advanced menu contains special appliance functions for setting up your appliance. Access to the Advanced menu is protected by the numerical code **1 5 1**. (see 3.2.2 Opening the Advanced menu)

3.2.1 Opening the Settings menu

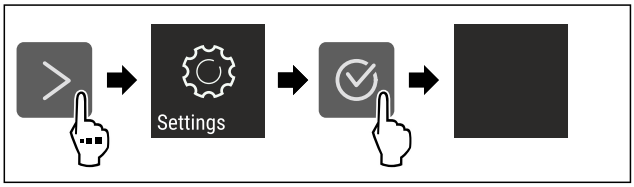

Fig. 2 Example illustration

▶ Carry out action steps according to the illustration.
▷ Settings menu is open.
▶ If necessary: Navigate to the desired function.

3.2.2 Opening the Advanced menu



Fig. 3

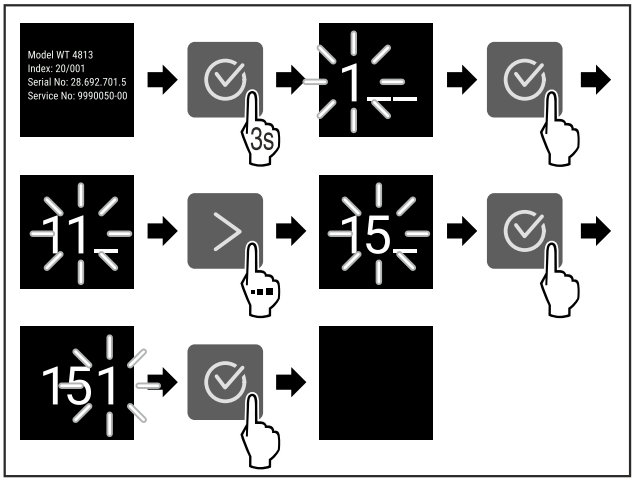

*Fig. 4 Example illustration, access with numerical code **151***

▶ Carry out action steps according to the illustration.
▷ The expanded menu is open.
▶ If necessary: Navigate to the desired function.

3.3 Sleep mode

If you do not touch the display for 1 minute, the display switches to sleep mode. In sleep mode, the display brightness is dimmed.

3.3.1 Ending sleep mode

▶ Press any navigation key.
▷ Sleep mode is ended.

4 Putting into operation

4.1 Switching on appliance (first use)

Make sure that the following requirements are fulfilled:

- ❑ The appliance has been installed and connected in accordance with the installation instructions.
- ❑ All adhesive strips, adhesive and protective films and transport locks are removed from inside and on the appliance.
- ❑ All marketing leaflets are removed from the drawers.
- ❑ You are familiar with the functionality of the Touch display. (see 3 Functionality of the Touch display)

Switch on the appliance using the Touch display:

- ▶ If the display is in sleep mode: Press the confirmation symbol.
- ▶ Carry out action steps according to the illustration.

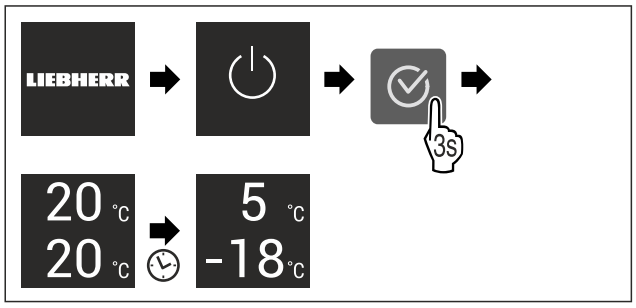

Fig. 5 Example illustration

- ▷ Status display appears.
- ▷ The appliance cools to the temperature set at the factory.
- ▷ The appliance starts in demo mode (status display with DEMO appears): If the appliance starts in demo mode, you can deactivate demo mode within the next 5 minutes. (see Demo mode)

More information:

- Start the EasyTwist-Ice for the first time. (see 4.2 Starting the EasyTwist-Ice for the first time*) *
- Start the SmartDevice for the first time. (see 2.3 SmartDevice) and (see WiFi)

Note
The manufacturer recommends:

- ▶ Stock with food: Wait for around 6 hours until the set temperature is reached.
- ▶ **Store frozen foods** at -18 °C or colder.
- ▶ Observe the notes on storing food. (see 5.1 Information regarding storage)

Note
Accessories can be purchased from the Liebherr-Hausgeräte store at home.liebherr.com/shop/de/deu/zubehor.html.

4.2 Starting the EasyTwist-Ice for the first time*

If your appliance is equipped with EasyTwist-Ice, you must clean the EasyTwist-Ice **before using it for the first time**.

Make sure that the following requirements are fulfilled:

- ❑ The appliance is properly connected.

- ▶ Clean the EasyTwist-Ice. (see 9.5.6 Cleaning the EasyTwist-Ice*)
- ▶ Fill the water tank. (see Filling the water tank)

5 Storage

5.1 Information regarding storage

WARNING
Fire hazard from electrical appliances!
If you use electrical appliances in the food area of your appliance, they can cause a fire.

- ▶ Do not use electrical appliances in the food area of the appliance unless recommended by the manufacturer.

Note
The energy consumption increases and the cooling power goes down if ventilation is not sufficient.

- ▶ Always keep air slots clear.

Observe the following specifications for storage:

- In the freezer compartment: Package food properly.
- Package or cover foods that readily take on or give off odours or taste in closed containers.
- Package raw meat or fish in clean, closed containers. This will prevent meat or fish from touching or dripping onto other food.
- Keep liquids in closed containers.
- Leave space between goods to ensure good air circulation.
- Store food according to the instructions on the packaging.
- Always observe the best-before date indicated on the packaging.

Note
Failure to follow these guidelines can lead to foodstuffs spoiling.

5.2 Fridge compartment

The air circulation in the appliance creates different temperature zones. You will find the different temperature zones in the appliance and equipment overview. (see 2.2 Overview of the appliance and equipment)

5.2.1 Arranging your food properly

- ▶ Upper area and door: Store butter, cheese, tinned food and tubes.
- ▶ Coldest temperature zone: Store perishable foods such as pre-cooked meals, meat and lunch meats.
- ▶ Bottom shelf: Store raw meat or fish.

5.3 EasyFresh

EasyFresh is great for non-packaged foods, such as fruit and vegetables.

The humidity inside the drawer depends on the humidity content of the food inside it, and the frequency at which it is opened. The humidity can be regulated. (see 8.6 Compartment lid for EasyFresh Safe)

5.3.1 Arranging your food properly

- ▶ Store unpackaged fruit and vegetables.
  If the humidity is too high:
- ▶ Regulate the humidity.

5.4 Freezer compartment

Here, a dry, frosty storage climate is created at -18 °C. A frosty storage climate is suitable for storing frozen food for several months, for making ice cubes or freezing fresh food.

5.4.1 Freezing food

Freezing quantity

The maximum amount of fresh food that you can freeze within 24 hours is specified on the type plate (see 10.5 Model plate) under “Freezing capacity ... kg/24h”.

To ensure that food quickly freezes through, adhere to the following quantities per package:

- Fruit and vegetables up to 1 kg
- Meat up to 2.5 kg

Freezing food using SuperFrost

Depending on the quantity to be frozen, you can activate SuperFrost before freezing in order to achieve lower freezing temperatures. (see SuperFrost)

▶ Activate SuperFrost if the amount of food you have to freeze is more than approx. 2 kg.

The time at which you activate SuperFrost depends on the amount of food you have to freeze:

Freezing quantity	Time at which you should activate SuperFrost
Small amount of food to freeze	Activate SuperFrost about 6 hours before freezing. As soon as the appliance automatically deactivates SuperFrost, you can rearrange the food.
Maximum amount of food to freeze	Activate SuperFrost about 24 hours before freezing. As soon as the appliance automatically deactivates SuperFrost, you can rearrange the food.

Arranging your food properly

CAUTION
Risk of injury from broken glass!
Bottles and cans with beverages can burst during freezing. This applies in particular to carbonated beverages.

▶ Only freeze bottles and cans with beverages if you have activated the BottleTimer function in the SmartDevice app.

Freezing quantity	Arranging your food properly
Small amount of food to freeze	Place packaged food in the top drawer. If possible, place groceries at the back of the drawer near the rear wall.
Maximum amount of food to freeze	Distribute packaged groceries throughout all drawers, but only place frozen food in the bottom drawer. If possible, place groceries at the back of the drawer near the rear wall.

5.4.2 Defrosting food

WARNING
Risk of food poisoning!

▶ Do not re-freeze thawed food.
▶ Use defrosted foodstuff as soon as possible.

You can defrost food in several ways:

- In the fridge compartment
- In the microwave
- In the oven/fan-assisted oven
- At room temperature

▶ Take out only as much food as necessary.

5.5 Storage times

Refer to the specified storage times as a guide.

In the case of foods with a minimum shelf life, the date indicated on the packaging still applies.

5.5.1 Fridge section

Always follow the best-before date stated on the packaging.

5.5.2 Freezer compartment

Recommended storage period for various types of food		
Ice cream	at -18 °C	2 to 6 months
Sausages, ham	at -18 °C	2 to 3 months
Bread, baked goods	at -18 °C	2 to 6 months
Game, pork	at -18 °C	6 to 9 months
Fatty fish	at -18 °C	2 to 6 months
Lean fish	at -18 °C	6 to 8 months
Cheese	at -18 °C	2 to 6 months
Poultry, beef	at -18 °C	6 to 12 months
Vegetables, fruit	at -18 °C	6 to 12 months

6 Saving energy

- Pay attention to good ventilation. Do not cover ventilation holes or grids.
- Always keep the fan air slits clear.
- Do not place the appliance in direct sunlight or near radiators or similar sources of heat.
- If the appliance is placed directly next to an oven, the energy consumption may increase slightly. This is dependent on the service life and usage intensity of the oven.
- Energy consumption depends on the installation conditions, e.g. the ambient temperature (see 2.4 Appliance range of use) . A warmer ambient temperature can increase the energy consumption.
- Open the appliance for as short a time as possible.
- The lower the temperature is set the higher the energy consumption.
- Sort your food: home.liebherr.com/food.
- Keep all food properly packed and covered. This prevents frost from forming.
- Only take food out for as long as necessary so that it doesn't warm up too much.
- Inserting warm food: allow to cool down to room temperature first.

- Thaw frozen food in the refrigerator.
- For longer periods of absence, use HolidayMode (see HolidayMode) .

7 Controls

7.1 Controls and displays

7.1.1 Status display

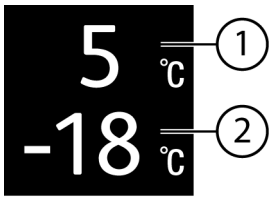

Fig. 6

(1) Temperature display of the fridge section

(2) Freezer compartment temperature display

The Status display shows the set temperature and is the home display. From there, you can navigate to the options and settings.

7.1.2 Display symbols

Display symbols provide information on the current appliance status:

Symbol	Appliance status
	**Standby** The appliance or temperature zone is switched off.
	**Flashing number** Appliance is working. Temperature flashes until the set value is reached.
	**Flashing symbol** Appliance is working. Setting is made.
	**Bar grows steadily** Function is activated.

7.2 Appliance functions

7.2.1 Notes on the appliance functions

The appliance functions are set at the factory so that your appliance is fully functional.

Before you alter, activate or deactivate the device functions, make sure that the following requirements are met:

- ❑ You have read and understood the descriptions of how the display works. (see 3 Functionality of the Touch display)
- ❑ You have familiarised yourself with the operating and display elements of your appliance.

 Switching the appliance off and on

Use this function to switch the entire appliance off and on.

Switching off the appliance

When you switch the appliance off, then the previously saved settings are saved.

Make sure that the following requirements are fulfilled:

- ❑ Handling instructions (see 11 Shutting down) are carried out.



Fig. 7

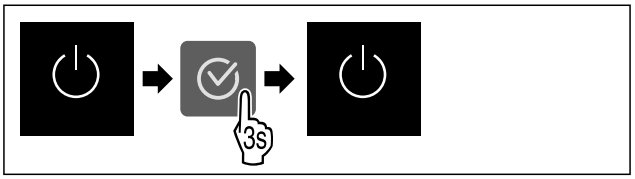

Fig. 8

▶ Carry out action steps according to the illustration.
▷ Appliance is switched off.
▷ The standby symbol appears in the display.
▷ Display turns black.

Switching on the appliance

If the display is in sleep mode:

▶ Press any navigation key.

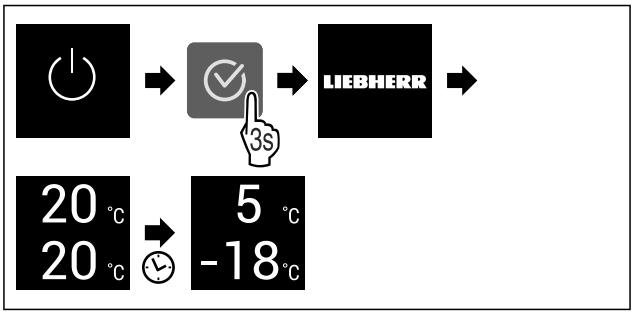

Fig. 9 Example illustration

▶ Carry out action steps according to the illustration.
When the appliance starts in demo mode:
▶ Deactivating demo mode. (see Deactivating demo mode)
▷ The appliance is switched on.
▷ Previous settings are restored.
▷ The appliance cools to the target temperature set.

 Switching temperature zone off and on

You can switch temperature zones of the appliance off independently.

Application:

- Cleaning
- Defrosting

Switching the fridge compartment off

Make sure that the following requirements are fulfilled:

- ❑ Refrigerator compartment has been emptied.

*** Depending on model and options**

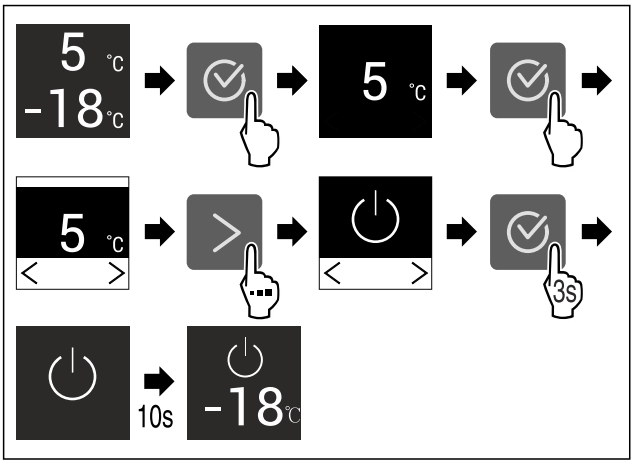

Fig. 10 Example illustration

▶ Carry out action steps according to the illustration.
▷ Refrigerator compartment is switched off.

Switching the fridge compartment on

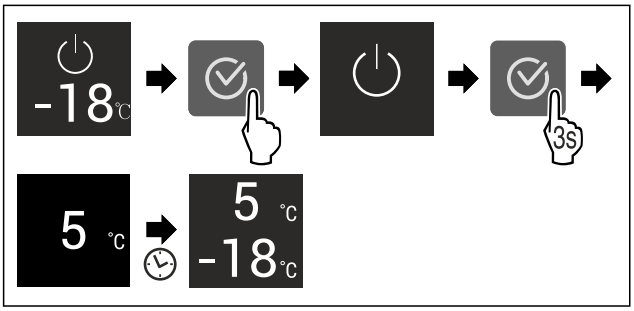

Fig. 11 Example illustration

▶ Carry out action steps according to the illustration.
▷ Refrigerator compartment is switched on.
▷ The appliance cools to the last set temperature.

WiFi

Use this function to connect your appliance to WiFi. You can then operate it via the SmartDevice app on a mobile device. You can also use this function to disconnect or reset the WiFi connection.

To connect your device to WiFi, you need the SmartDeviceBox.

More information on the SmartDevice: (see 2.3 SmartDevice)

Note
The SmartDevice function is not available in the following countries: Russia, Belarus, Kazakhstan.

You cannot use the SmartDeviceBox.

Establishing the WiFi connection for the first time

Make sure that the following requirements are fulfilled:

- ❑ You have purchased and inserted a SmartDeviceBox. (see 2.3 SmartDevice)
- ❑ You have installed the SmartDevice app (see apps.home.liebherr.com).
- ❑ Registration in the SmartDevice app is completed.



Fig. 12

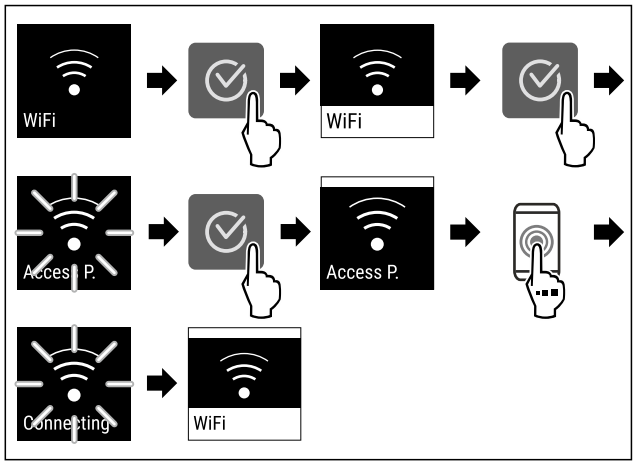

Fig. 13

▶ Carry out action steps according to the illustration.
▷ Connection is established.

Disconnecting from the WiFi



Fig. 14

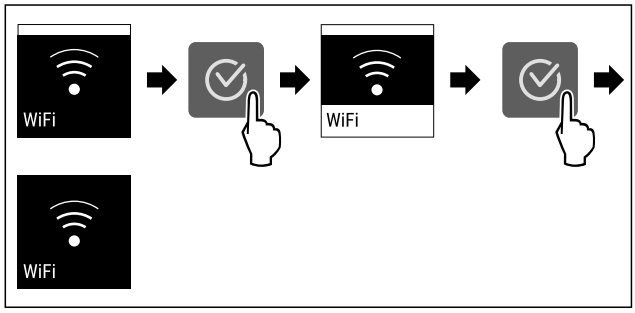

Fig. 15

▶ Carry out action steps according to the illustration.
▷ There is no connection.

Resetting the WiFi connection



Fig. 16

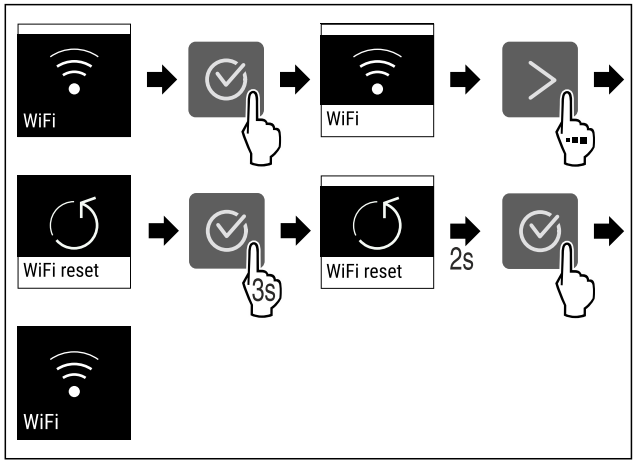

Fig. 17

▶ Carry out action steps according to the illustration.
▷ WiFi connection and other WiFi settings are reset to factory settings.

Showing information about the WiFi connection



Fig. 18

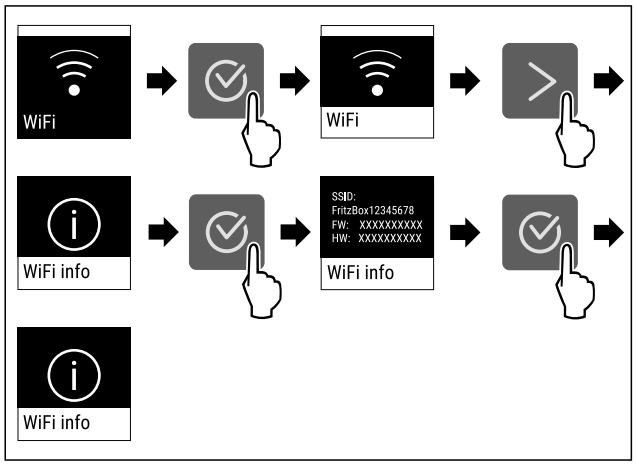

Fig. 19

▶ Carry out action steps according to the illustration.

5 °C Temperature

Use this function to set the temperature.

The temperature depends on the following factors:

- Frequency of door opening
- Duration of door opening
- Room temperature of the installation site
- Type, temperature and quantity of food

Temperature zone	Factory-set temperature	Recommended setting
5 °C Fridge section	5 °C	4 °C
-18 °C Freezer section	-18 °C	-18 °C

Setting the temperature in the fridge section

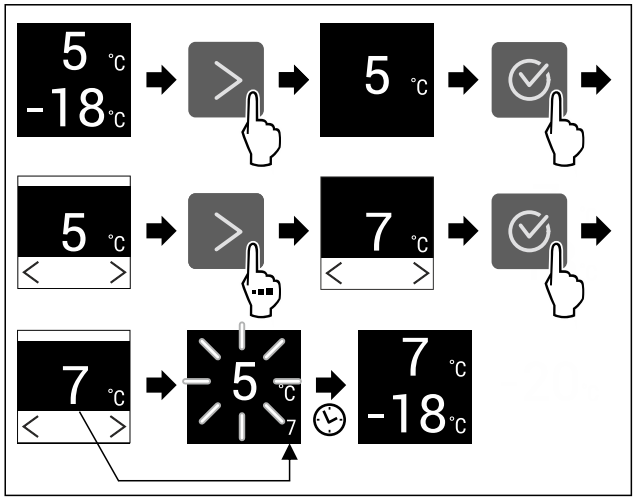

Fig. 20 Example illustration

▶ Carry out action steps according to the illustration.
▷ Temperature is set.

Setting the temperature in the freezer section

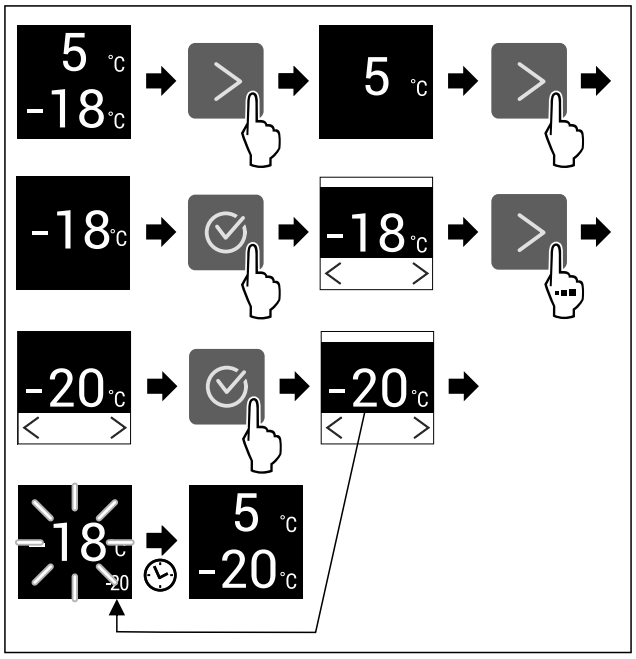

Fig. 21 Example illustration

▶ Carry out action steps according to the illustration.
▷ Temperature is set.

°C/°F Temperature unit

Use this function to set the temperature unit. You can set degrees Celsius or degrees Fahrenheit as the temperature unit.

Setting the temperature unit



Fig. 22

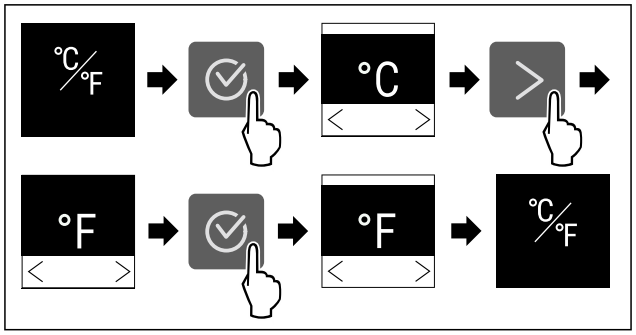

Fig. 23 Example illustration: Switch from degrees Celsius to degrees Fahrenheit.

▶ Carry out action steps according to the illustration.
▷ The temperature unit is set.

D1 D-Value*

Use this function to set the D-Value.

The D-Value specifies whether you are operating your fridge section with a dry rear wall or without a dry rear wall. The rear wall is installed in the appliance as delivered. The D-Value is pre-set to D1.

*** Depending on model and options**

You can remove the rear wall for cleaning. (see 9.5.4 Cleaning the dry rear panel*) In order to operate the appliance without a rear wall, you must set the D-Value to D2.

Note
The declared energy consumption was determined without a dry rear wall. The appliance is fully functional with a dry rear wall but its energy consumption will be slightly higher. Liebherr recommends:
▶ Operate the appliance with a dry rear wall in order to prevent visible condensate and the food freezing.

Setting the D-Value



Fig. 24

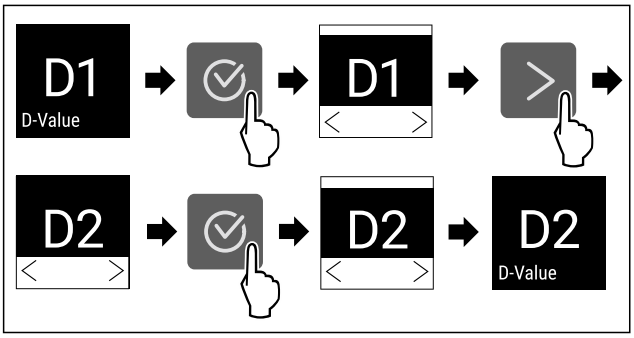

Fig. 25 Example illustration: Switch from D1 to D2.
▶ Carry out action steps according to the illustration.
▷ The D-Value is set.

SuperCool

You can use this function to activate or deactivate SuperCool. If SuperCool is activated, then the appliance increases the cooling capacity. It allows you to achieve lower cooling temperatures. You can activate SuperCool when you would like to cool a large quantity of food quickly.

If the function is active, the appliance operates at higher power. As a result, the appliance's operating noise may be temporarily louder and energy consumption will increase.

Activating SuperCool

Time for activation of the function:

- When you would like to store fresh food in the fridge section: Activate the function when inserting food.



Fig. 27

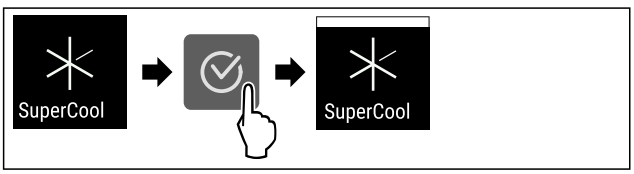

Fig. 28
▶ Carry out action steps according to the illustration.
▷ SuperCool is activated.

Deactivating SuperCool

SuperCool is deactivated automatically after 18 hours. However, you can also deactivate SuperCool manually at any time:

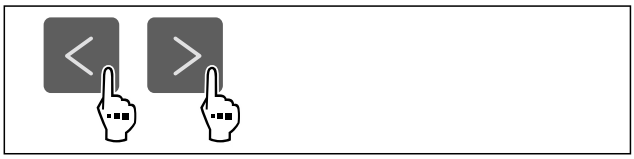

Fig. 29

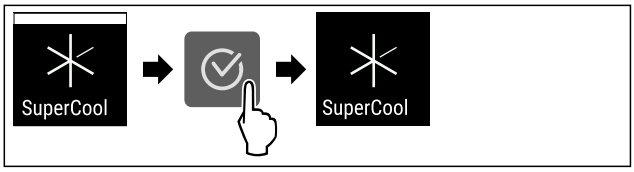

Fig. 30
▶ Carry out action steps according to the illustration.
▷ SuperCool is deactivated.
▷ The appliance continues to run in normal mode.
▷ The appliance cools to the temperature set previously.

PowerCool

You can use this function to activate or deactivate PowerCool. PowerCool ensures optimised temperature layers for cooling your food.

The function applies to the fridge section.

Application:

- At higher room temperatures (as of approx. 35 °C)
- At high humidity, e.g. on summer days
- When storing moist food, in order to prevent condensate forming in the interior

Note
The fan may also run even if the function is deactivated. It therefore ensures even temperature distribution in the appliance.

If the function is active, the device operates at higher power. As a result, the device's operating noise may be temporarily louder and energy consumption will increase.

Activating PowerCool

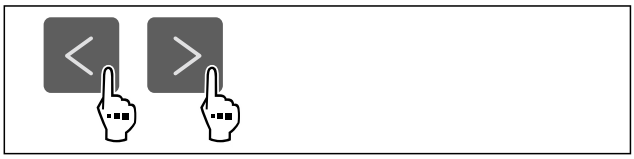

Fig. 31

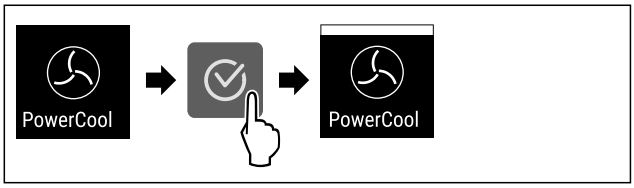

Fig. 32
▶ Carry out action steps according to the illustration.
▷ PowerCool is activated.

Deactivating PowerCool

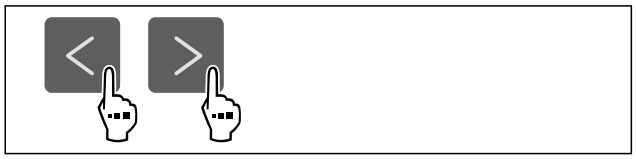

Fig. 33

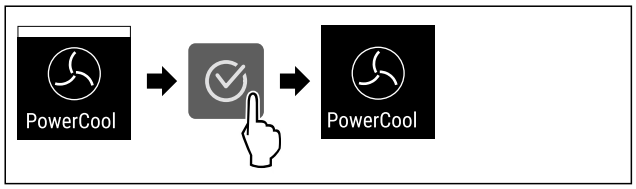

Fig. 34

▶ Carry out action steps according to the illustration.
▷ PowerCool is deactivated.

SuperFrost

You can use this function to activate or deactivate SuperFrost. If SuperFrost is activated, then the appliance increases the freezing capacity. It allows you to achieve lower freezing temperatures.

Application:

- Quickly freeze fresh food through to the core.
  This ensures that the nutrition, appearance and taste of frozen food is maintained.
- Increase the cold reserve in stored frozen food before defrosting the appliance.

If the function is active, the appliance operates at higher power. As a result, the appliance's operating noise may be temporarily louder and energy consumption will increase.

If the door is open for too long, e.g. because you are putting food in, the appliance automatically checks whether the actual temperature in the appliance matches the set temperature. If the difference exceeds a certain value, the appliance automatically cools more vigorously. As a result, the temperature shown on the display may be higher than the actual temperature in the appliance. This is normal and your appliance is working correctly.

Activating SuperFrost

Make sure that the following requirements are fulfilled:

❑ Freezing quantity and time for activation of SuperFrost are taken into account. (see Freezing food using SuperFrost)

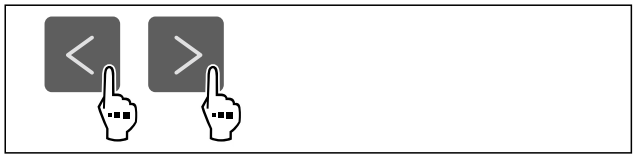

Fig. 35

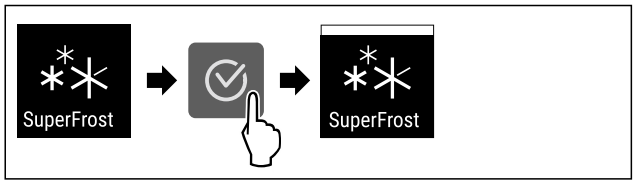

Fig. 36

▶ Carry out action steps according to the illustration.
▷ SuperFrost is activated.

Deactivating SuperFrost

SuperFrost is automatically deactivated after 56 to 72 hours depending on the quantity of the food inserted. However, you can also deactivate SuperFrost manually at any time:

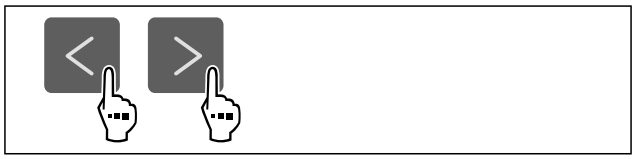

Fig. 37

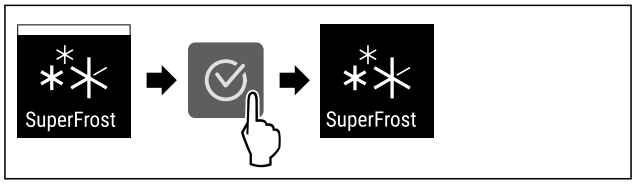

Fig. 38

▶ Carry out action steps according to the illustration.
▷ SuperFrost is deactivated.
▷ The appliance continues to run in normal mode.
▷ The appliance cools to the temperature set previously.

Start defrosting cycle

Use this function to start the automatic defrosting cycle manually if it does not start automatically in the event of a fault.

Starting defrosting cycle



Fig. 39

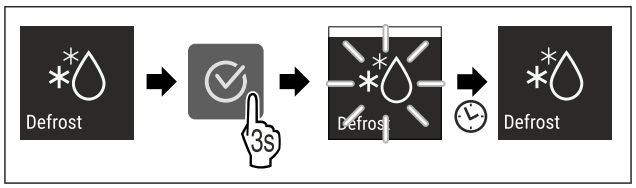

Fig. 40

▶ Carry out action steps according to the illustration.
▷ Defrosting cycle has started: Icon flashes until defrosting cycle is automatically completed.
▷ When defrosting cycle is finished: The device continues to run in normal mode.

Cancelling defrosting cycle

The defrosting cycle will be stopped automatically. However, you can also cancel the defrosting cycle at any time during the defrosting process:

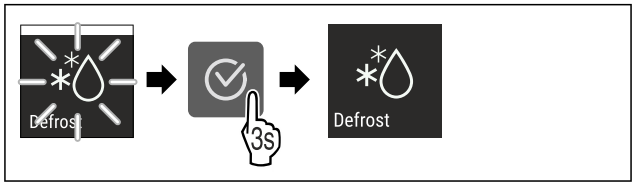

Fig. 41

▶ Carry out action steps according to the illustration.
▷ Defrosting cycle is cancelled.
▷ The device continues to run in normal mode.

PartyMode

You can use this function to activate or deactivate PartyMode. PartyMode activates various functions that are useful for a party.

PartyMode activates the following functions:

- SuperCool (see SuperCool)
- SuperFrost (see SuperFrost)

You can adjust all listed functions individually and flexibly. When you deactivate PartyMode, all changes are discarded.

If the function is active, the device operates at higher power. As a result, the device's operating noise may be temporarily louder and energy consumption will increase.

Activating PartyMode



Fig. 42

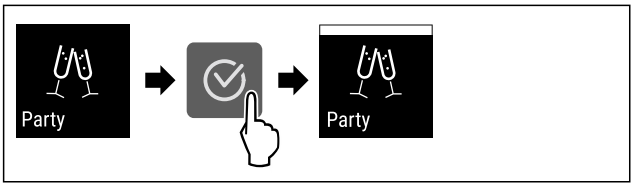

Fig. 43

▶ Carry out action steps according to the illustration.
▷ PartyMode and the associated functions are activated.
▷ The current temperature flashes until the target temperature is reached.

Deactivating PartyMode

The PartyMode is automatically deactivated after 24 seconds. However, you can also deactivate PartyMode manually at any time:



Fig. 44

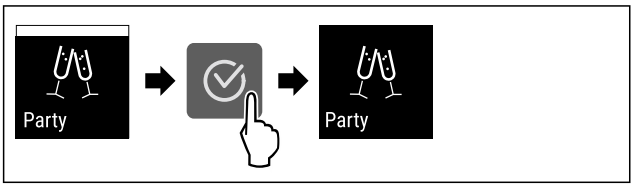

Fig. 45

▶ Carry out action steps according to the illustration.
▷ PartyMode is deactivated.
▷ The appliance cools to the temperature set previously: The current temperature flashes until the target temperature is reached.

HolidayMode

You can use this function to activate or deactivate HolidayMode. If you activate HolidayMode, the fridge section is set to 15 °C. This saves you energy during longer periods of absence and prevents bad odours and growth of mould.

Appliance status when HolidayMode is active
Fridge section cools to 15 °C.
EasyFresh cools to 15 °C.
The set temperature is maintained in the freezer section.
PartyMode is deactivated.
SuperCool is deactivated.
PowerCool is deactivated.

Activating HolidayMode

▶ Empty the fridge section completely.
▶ Empty EasyFresh completely.



Fig. 46

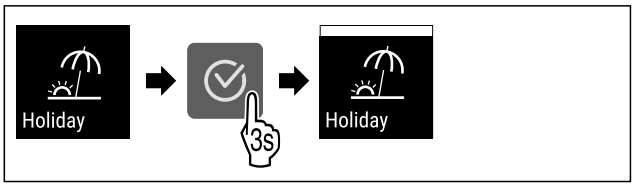

Fig. 47

▶ Carry out action steps according to the illustration.
▷ HolidayMode is activated.
▷ Temperature display shows HolidayMode symbol.

Deactivating HolidayMode



Fig. 48

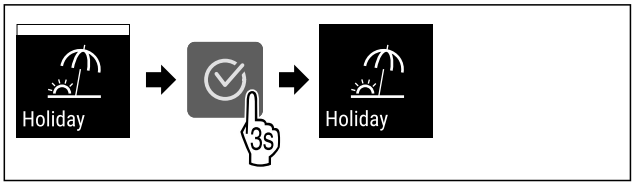

Fig. 49

▶ Carry out action steps according to the illustration.
▷ HolidayMode is deactivated.
▷ The appliance cools to the temperature set previously.

SabbathMode

You can use this function to activate or deactivate SabbathMode. If you activate this function, some electronic functions are switched off. As a result, your device meets the religious requirements for Jewish holidays such as Sabbath and complies with STAR-K Kosher certification.

Device status when SabbathMode is active
The status display shows SabbathMode permanently.
All functions on the display are locked except for the **Deactivate SabbathMode function**.
Active functions remain active.

Device status when SabbathMode is active
The display remains bright when you close the door.
The interior lighting is deactivated.
Reminders are not implemented. The set time interval stops.
Reminders and warnings are not displayed.
There is no door alarm.
There is no temperature alarm.
The defrosting cycle operates only for the specified time, without considering the appliance consumption.
After a power failure, the appliance returns to SabbathMode.

Device status

Note
This appliance has certification from the "Institute for Science and Halacha". (www.machonhalacha.co.il)

You can find a list of STAR-K-certified appliances at www.star-k.org/appliances.

Activating SabbathMode

WARNING
Danger of food poisoning from spoiled food!
If you have SabbathMode activated and a power failure occurs, no message appears in the status display about the power failure. Once the power is restored, the appliance continues to operate in SabbathMode. The power failure may mean that food spoils and the consumption of this food could lead to food poisoning.
After a power failure:
▶ Do not consume food that was frozen and has thawed out.



Fig. 50

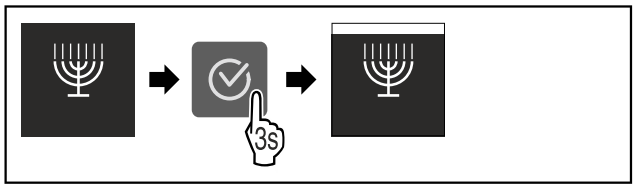

Fig. 51

▶ Carry out action steps according to the illustration.
▷ SabbathMode is activated.
▷ The status display shows SabbathMode permanently.

Deactivating SabbathMode

The SabbathMode is automatically deactivated after 80 hours. However, you can also deactivate SabbathMode manually at any time:

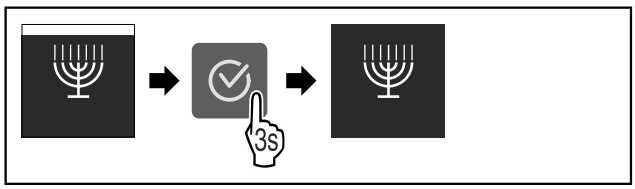

Fig. 52

▶ Carry out action steps according to the illustration.
▷ SabbathMode is deactivated.

E-Saver

You can use this function to activate or deactivate Energy saving mode. If energy saving mode is activated, the energy consumption decreases and the temperature in the device increases. The food remains fresh, but the shelf life is shortened.

Temperature zone	Recommended setting (see Setting the temperature in the fridge section)	Temperature with active E-Saver
5 °C Fridge section	4 °C	7 °C
-18 °C Freezer section	-18 °C	-16 °C

Temperatures

Activating E-Saver



Fig. 53

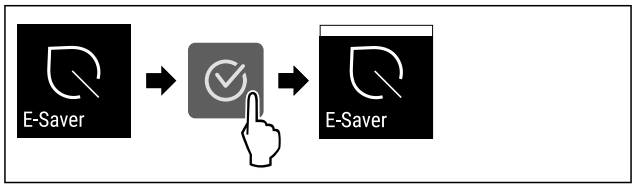

Fig. 54

▶ Carry out action steps according to the illustration.
▷ Energy saving mode is activated.

Deactivating E-Saver

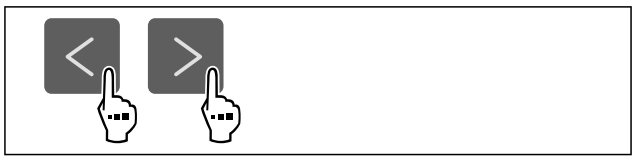

Fig. 55

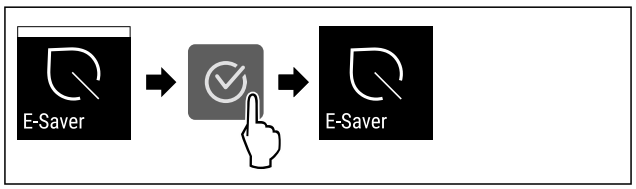

Fig. 56

▶ Carry out action steps according to the illustration.
▷ Energy saving mode is deactivated.

CleaningMode

You can use this function to activate or deactivate CleaningMode. CleaningMode enables the appliance to be cleaned conveniently.

This setting applies to the fridge section.

Application:
- Clean the fridge section. (see 9.5 Cleaning the appliance)

Device status when CleaningMode is active
The status display shows CleaningMode permanently.
The fridge section is switched off.
Interior lighting is activated.
The reminders and warnings are not displayed. No signal tone sounds.

Device status

Activating CleaningMode



Fig. 57

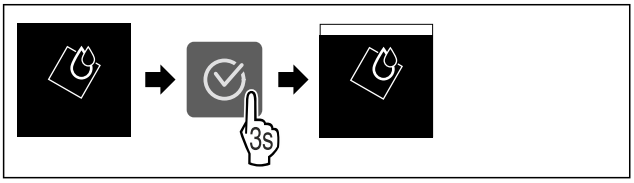

Fig. 58

▶ Carry out action steps according to the illustration.
▷ CleaningMode is activated.
▷ The status display shows CleaningMode permanently.

Deactivating CleaningMode

CleaningMode is deactivated automatically after 60 minutes. However, you can also deactivate CleaningMode manually at any time:

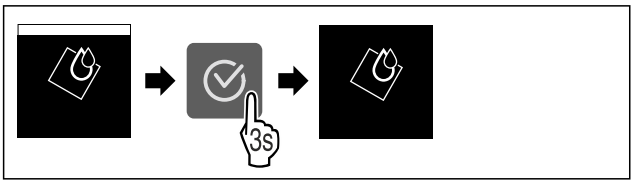

Fig. 59

▶ Carry out action steps according to the illustration.
▷ CleaningMode is deactivated.
▷ The appliance cools to the temperature set previously.

Display brightness

Use this function to set the display brightness in stages.

You can select the following brightness levels:
- 40 %
- 60 %
- 80 %
- 100 % (pre-setting)

Setting the brightness



Fig. 60

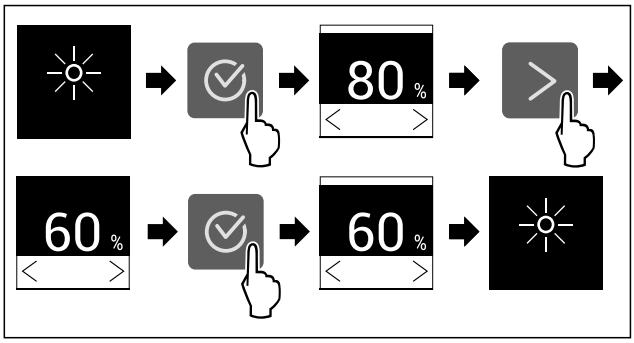

Fig. 61 Example illustration: Switch from 80 % to 60 %.

▶ Carry out action steps according to the illustration.
▷ The brightness is set.

Door alarm

Use this function to activate or deactivate the door alarm. The door alarm sounds if the door is open for too long. The door alarm is activated on delivery. You can set how long the door may be open before the door alarm sounds.

The following values can be set:
- 1 minute
- 2 minutes
- 3 minutes
- Off

Setting the door alarm



Fig. 62

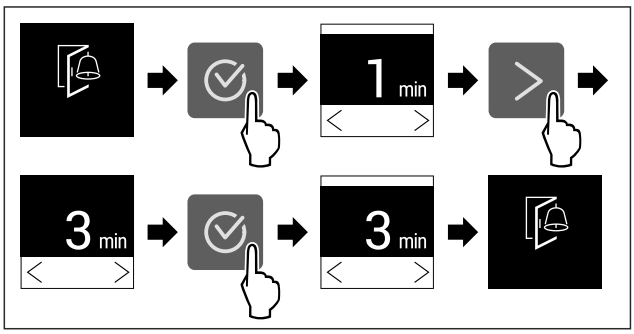

Fig. 63 Example illustration: Change door alarm from 1 minute to 3 minutes.

▶ Carry out action steps according to the illustration.
▷ The door alarm is set.

Deactivating the door alarm



Fig. 65

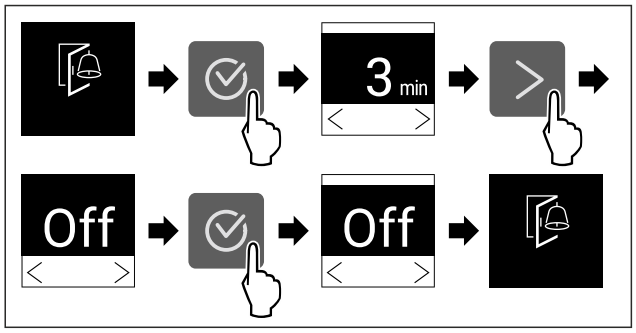

Fig. 66

▶ Carry out action steps according to the illustration.
▷ The door alarm is deactivated.

Input lock

You can use this function to activate or deactivate the input lock. The input lock prevents the appliance being operated accidentally, e.g. by children.

Application:

- Avoid unintentional modification of functions.
- Avoid unintentional switching off of the device.
- Avoid unintentional temperature setting.

Activating the input lock

If you activate the input lock, you can continue to navigate in the menus but you cannot select or change other functions.



Fig. 67

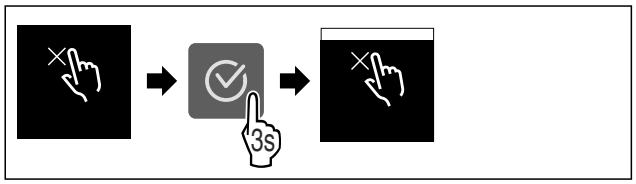

Fig. 68

▶ Carry out action steps according to the illustration.
▷ Input lock is activated.

Deactivating the input lock



Fig. 69

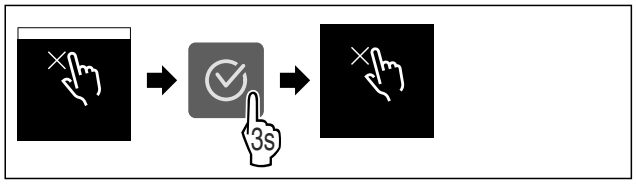

Fig. 70

▶ Carry out action steps according to the illustration.
▷ Input lock is deactivated.

Device information

Use this function to indicate the model name, index, serial number and service number of your device. You will need the device information when you contact customer service. (see 10.4 Customer Service)

Indicating the device information



Fig. 71



Fig. 72

▶ Carry out action steps according to the illustration.
▷ Display indicates device information.

Software

Use this function to indicate the software version of your device.

Indicating the software version



Fig. 73



Fig. 74

▶ Carry out action steps according to the illustration.
▷ Display indicates software version.

Reminder

Use this function to activate or deactivate the reminders. The function is activated on delivery.

If the function is activated, the following reminders will appear:

- Replace the FreshAir activated carbon filter (see Replace the FreshAir activated carbon filter)

Activating the reminder



Fig. 75

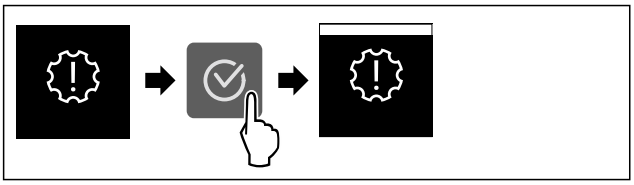

Fig. 76

▶ Carry out action steps according to the illustration.
▷ Reminder is activated.

Deactivating the reminder



Fig. 77

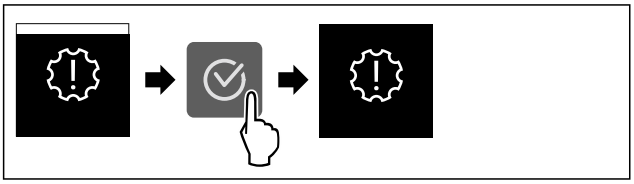

Fig. 78

▶ Carry out action steps according to the illustration.
▷ Reminder is deactivated.

Demo mode

Demo mode is a special feature for dealers who want to demonstrate appliance features. If you activate demo mode, all refrigeration functions are deactivated.

If you switch on your appliance and “Demo” appears in the status display, then demo mode is already activated.

If you activate and then deactivate demo mode, the appliance will be reset to factory defaults. (see Resetting to factory settings)

Activating demo mode



Fig. 79

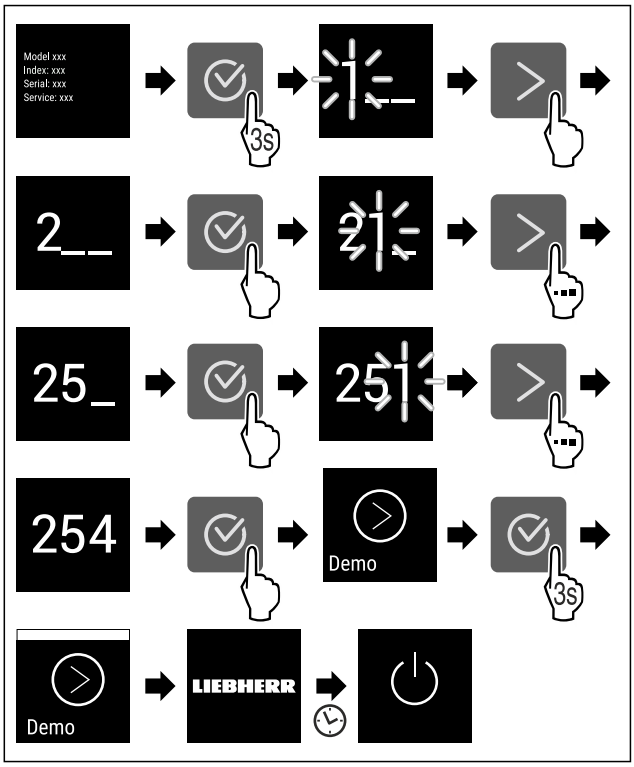

Fig. 80

▶ Carry out action steps according to the illustration.
▷ Demo mode is activated.
▷ Appliance is switched off.
▶ Switch on the appliance. (see 4.1 Switching on appliance (first use))
▷ “DEMO” appears in the status display.

Deactivating demo mode



Fig. 81

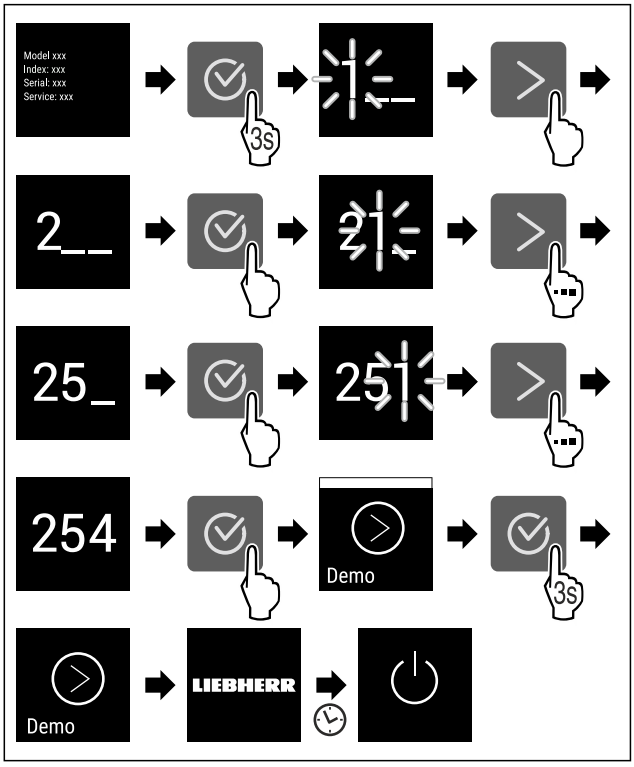

Fig. 82

▶ Carry out action steps according to the illustration.
▷ Demo mode is deactivated.
▷ Appliance is switched off.
▶ Switch on the appliance. (see 4.1 Switching on appliance (first use))
▷ Appliance is reset to factory settings.

Resetting to factory settings

Use this function to reset all settings to factory defaults. All settings you have made so far are reset to their original settings.

Performing a reset



Fig. 83

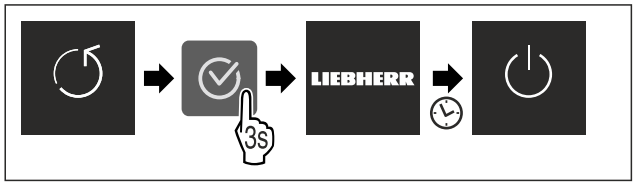

Fig. 84

▶ Carry out action steps according to the illustration.
▷ Device is reset.
▷ Device is switched off.
▶ Restart the device. (see 4.1 Switching on appliance (first use))

7.3 Messages

There are two categories of messages:

Category	Importance
Warning	Warnings appear in the event of a door alarm or malfunction. Simple warnings can be cancelled by yourself. In the event of serious malfunctions, you must contact customer service. (see 10.4 Customer Service)
Reminder	Reminders remind you of general processes. You can carry out these operations to end the message.

7.3.1 Overview of warnings

Behaviour of the appliance in the event of warnings:

- Warning appears on the display.
- The alarm tone sounds at an ever-increasing volume.
- The interior lighting pulsates for some warnings.

Message	Cause	Exit the message
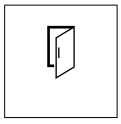 **Door alarm**	The message appears if the door is open for too long.	Carry out action steps. (see Door alarm)
 **Power outage alarm**	The message appears if the freezing temperature has risen due to a power failure.	Carry out action steps. (see Power outage alarm)
 **Temperature alarm**	The message appears if the freezing temperature does not correspond to the set temperature.	Carry out action steps. (see Temperature alarm)
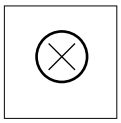 **Error**	The message appears if there is an appliance error. A component of the appliance has a fault.	Carry out action steps. (see Error)

7.3.2 Ending warnings

Door alarm

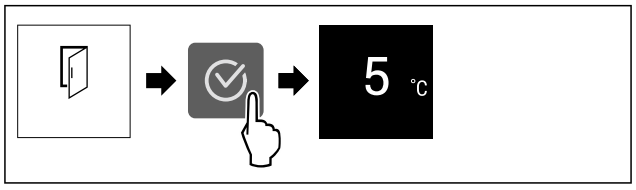

Fig. 85 Example illustration

▶ Carry out action steps according to the illustration.

-or-

▶ Close the door.

▷ The display returns to the status indicator.
▷ The appliance cools more vigorously, which means that the temperature shown on the display may be higher than the actual temperature inside the appliance.
▷ Appliance noises can be louder.

You can set how long the door may be open before the door alarm sounds. (see Setting the door alarm)

Power outage alarm

When the power failure has ended, the appliance will automatically cool down to the previously set target temperature without you having to confirm the message. However, for the message to disappear from the display, you must confirm it.

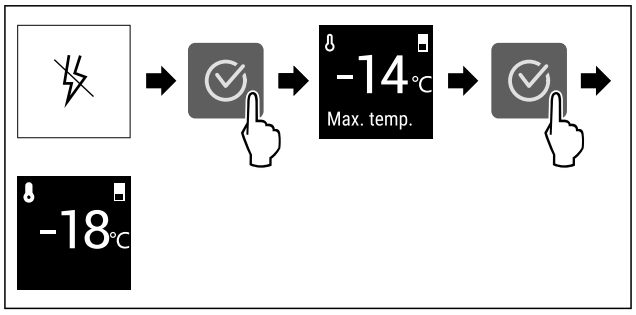

Fig. 86 Example illustration

▶ Press the confirmation symbol.
▷ Warmest freezing temperature is displayed.
▷ If the freezing temperature was below -9 °C: Food can still be consumed.
If the freezing temperature has risen above -9 °C:

▶ Check the food.
▶ Press the confirmation symbol.
▷ The display returns to the status indicator: Current temperature and target temperature are displayed.

Temperature alarm

Temperature differences can be caused by:

- You have put in warm, fresh food.
- Too much warm air has got in while you were sorting out the freezer or removing items.
- There has been a longer power failure.
- The appliance is faulty.

▶ Eliminate causes.
▷ The appliance cools to the target temperature set previously.

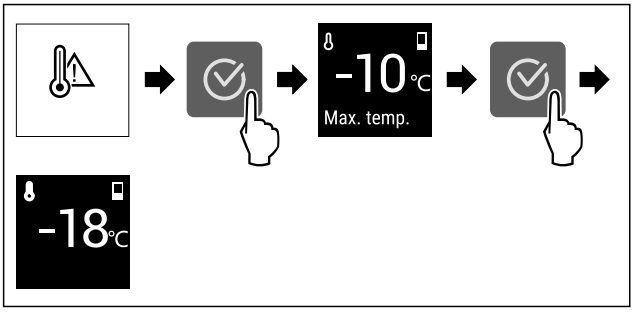

Fig. 87 Example illustration

▶ Press the confirmation symbol.
▷ Warmest freezing temperature is displayed.
▷ If the freezing temperature was below -9 °C: Food can still be consumed.
If the freezing temperature has risen above -9 °C:
▶ Check the food.
▶ Press the confirmation symbol.
▷ The display returns to the status indicator: Current temperature and target temperature are displayed.

Error

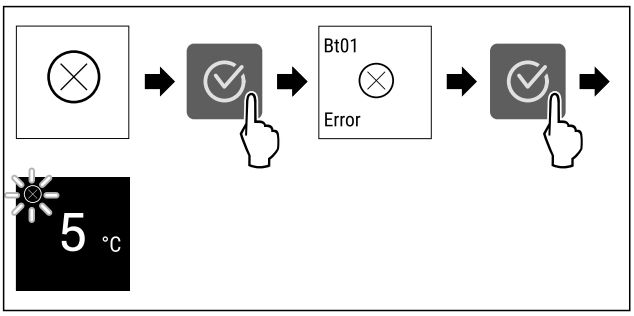

Fig. 88 Example illustration

▶ Press the confirmation symbol.
▷ Error code is displayed.
▶ Note the error code.
▶ Press the confirmation symbol.
▷ The display returns to the status indicator.
▶ Contact Customer Service. (see 10.4 Customer Service)

7.3.3 Overview of reminders

Behaviour of the appliance during reminders:

- Reminder appears on the display.
- Alarm tone sounds.
- The interior lighting pulsates for some reminders.

The following reminders can be deactivated (see Deactivating the reminder) :

- Replace the FreshAir activated carbon filter

Message	Cause	Exit the message
FreshAir **Replace the FreshAir activated carbon filter**	The message appears when the FreshAir activated carbon filter needs to be replaced.	Carry out action steps. (see Replace the FreshAir activated carbon filter)

7.3.4 Ending reminders

Replace the FreshAir activated carbon filter

Liebherr recommends: Replace the FreshAir activated carbon filter every 6 months.

Note
FreshAir activated charcoal filters can be purchased from the Liebherr-Hausgeräte store at home.liebherr.com/shop/de/deu/zubehor.html.

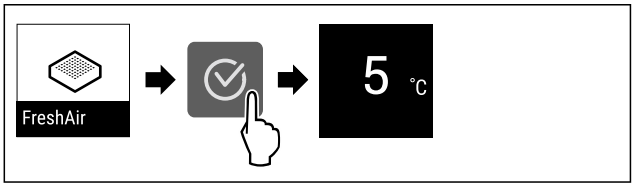

Fig. 89 Example illustration

▶ Press the confirmation symbol.
▶ Replace the activated carbon filter. (see 9.1 FreshAir carbon filter)
▷ Activated carbon filter ensures optimum air quality in the cooling unit.
▷ Reminder appears again after 6 months.

If you no longer wish to receive this reminder, you can deactivate it. (see Deactivating the reminder)

8 Features

8.1 Door rack

Door racks are suitable for storing drinks and food. You can move door racks for your own individual use and take them apart for cleaning. However, Liebherr recommends using the door racks in the position in the door as delivered from the factory.

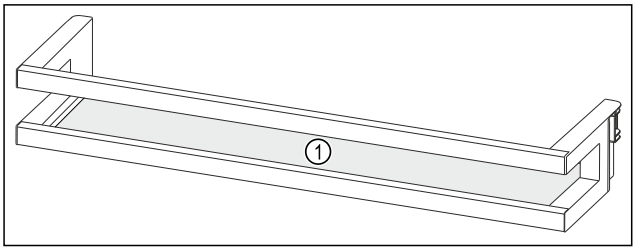

Fig. 90 Example illustration, Door rack

(1) Shelf

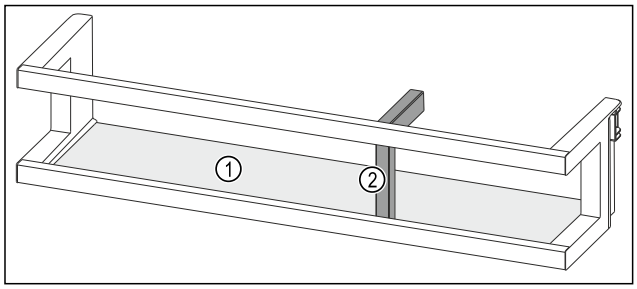

Fig. 91 Example illustration, Door rack with bottle holder
(1) Shelf **(2)** Bottle holder

The following table shows examples of what can be stored in each door rack. Do not exceed the maximum loading weight of the door.

Door rack	Food
Door rack (see Fig. 90)	Butter, cheese, tinned food, tubes
Door rack with bottle holder (see Fig. 91)	Bottles The sliding bottle holder secures the bottles in the door rack.

8.1.1 Removing the door rack

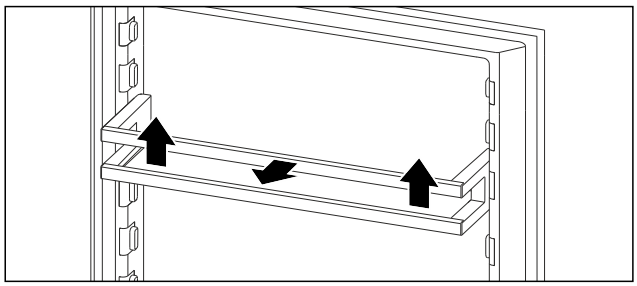

Fig. 92 Example illustration
▶ Push the door rack upwards.
▶ Pull the door rack forward.

8.1.2 Inserting the door rack

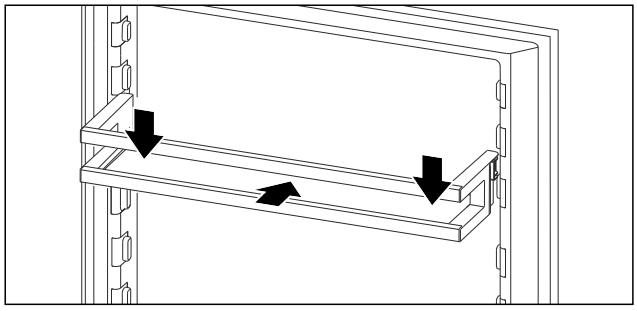

Fig. 93 Example illustration
▶ Slide in the door rack.
▶ Press the door rack down.

8.1.3 Removing the bottle holder*

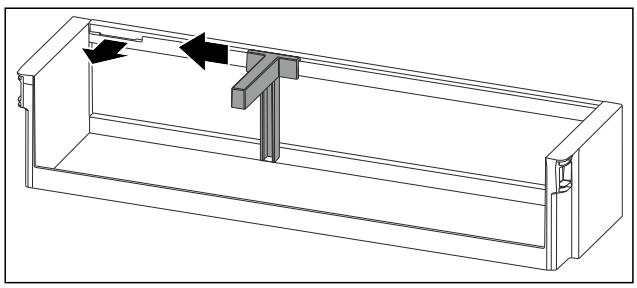

Fig. 94
▶ Slide the bottle holder to the side as far as the recess.
▶ Remove the bottle holder forwards.

8.1.4 Inserting the bottle holder*

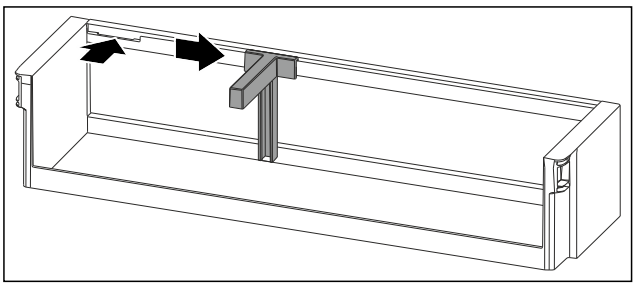

Fig. 95
▶ Insert the bottle holder in the recess.
▶ Push the bottle holder to the desired position to the side.

8.1.5 Dismantling the door rack*

It is possible to dismantle some of the door racks if you want to clean them or install or remove spare parts.

Dismantling the door rack

Ensure that the following requirements are met:
❑ Door rack has been removed. (see 8.1.1 Removing the door rack)

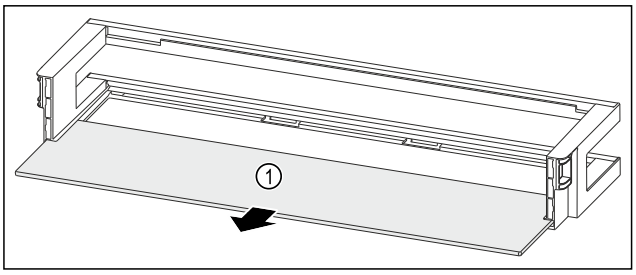

Fig. 96 Door rack with shelf
▶ Remove the shelf *Fig. 96 (1)*.

Dismantling the door rack with bottle holder

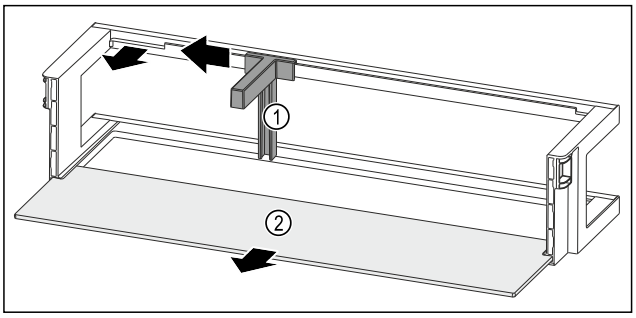

Fig. 97 Door rack with bottle holder and shelf
▶ Slide the bottle holder *Fig. 97 (1)* to the side as far as the recess.
▶ Remove the bottle holder *Fig. 97 (1)*.
▶ Remove the shelf *Fig. 97 (2)*.

8.1.6 Assembling the door rack*

Assembling the door rack

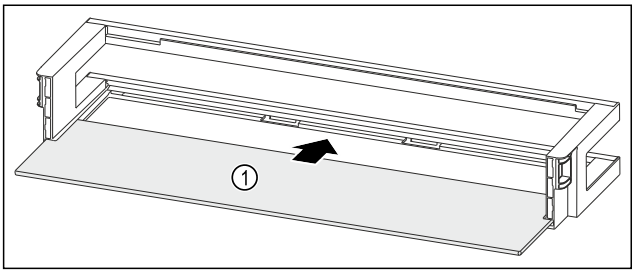

Fig. 98 Door rack with shelf

▶ Push the shelf *Fig. 98 (1)* into the side recesses.

Assembling the door rack with bottle holder

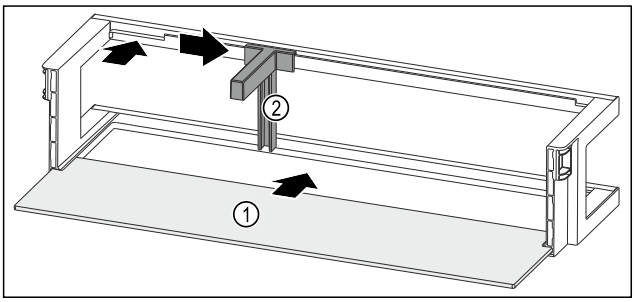

Fig. 99 Door rack with shelf

▶ Push the shelf *Fig. 99 (1)* into the side recesses.
▶ Insert the bottle holder *Fig. 99 (2)* in the recess.
▶ Push the bottle holder *Fig. 99 (2)* to the desired position to the side.

8.2 Shelves

8.2.1 Adjusting/removing the shelves

The shelves are prevented from being pulled out accidentally by pull out stops.

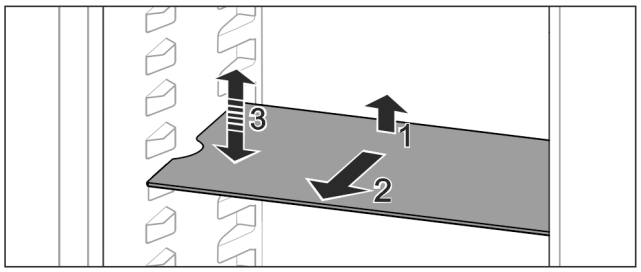

Fig. 100

▶ Lift the shelf and pull forward.
▷ Line up the side runner.
▶ Adjust the height of the shelf: Lift or lower it to the desired height and slide it in.

-or-

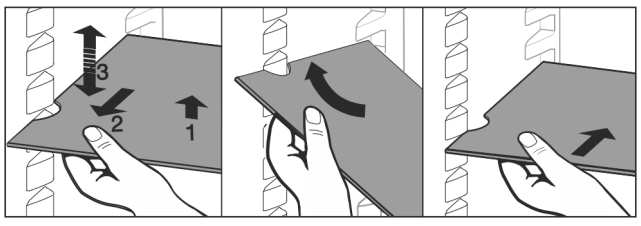

Fig. 101

▶ Remove the shelf completely: Pull it out to the front.

▶ Easier removal: Set the shelf at an angle.
▶ Insert the shelf again: Slide it in all the way.
▷ The pull-out stoppers point downwards.
▷ The pull-out stoppers are behind the front support.

You can also remove the shelf above the EasyFresh compartments.

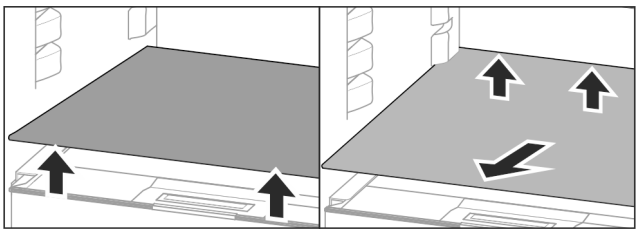

Fig. 102

Removing the shelf:
▶ Lift the shelf at the front and back.
▶ Pull it out towards you.

Do not store any goods on the compartment cover below!

Inserting the shelf:
▶ Place the shelf at an angle, sloping down towards the back.
▷ The pull-out stoppers point downwards.
▶ Slide the shelf into place.

8.2.2 Dismantling the shelves

The shelves can be dismantled for cleaning.

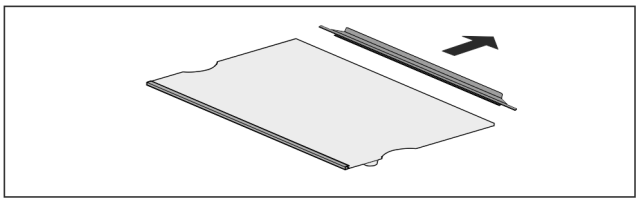

Fig. 103

▶ Dismantling the shelf.

8.3 Dividing shelf*

8.3.1 Using the dividing shelf

The shelves are prevented from being pulled out accidentally by pull out stops.

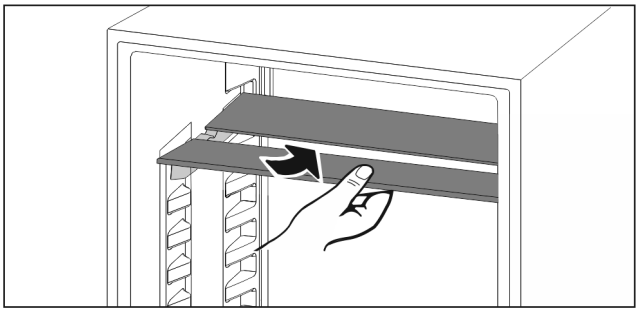

Fig. 104

▶ Push the dividing shelf underneath as shown.

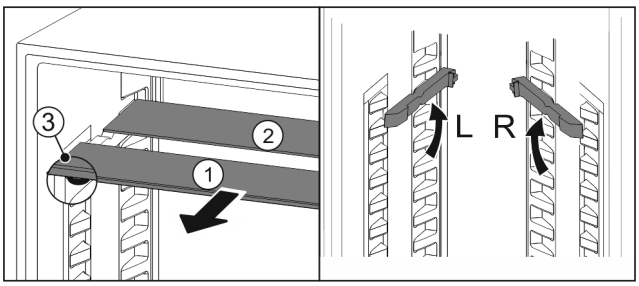

Fig. 105

Adjusting the height:

▶ Pull the glass panels out *Fig. 105 (1)* from the front, one at a time.
▶ Release the support rails and click in at the height you want.
▶ Slide in the glass panels one at a time.
▷ Flat pull-out stoppers at the front, right behind the support rails.
▷ High pull-out stoppers at the back.

Using both shelves:

▶ Hold the glass panel with one hand and pull it to the front.
▷ The glass panel *Fig. 105 (1)* and trim strip are at the front.
▷ The stops *Fig. 105 (3)* point down.

8.4 VarioSafe *

The VarioSafe offers space in the refrigerator compartment for small groceries, packages, tubes and jars, for example.

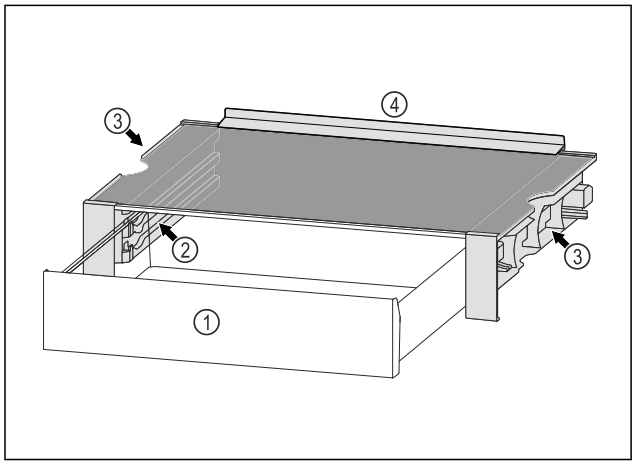

Fig. 106

(1) VarioSafe drawer
(2) Side panels with ribs for VarioSafe drawer
(3) Recesses on the left and right side panel
(4) Stop edge

8.4.1 Inserting the VarioSafe

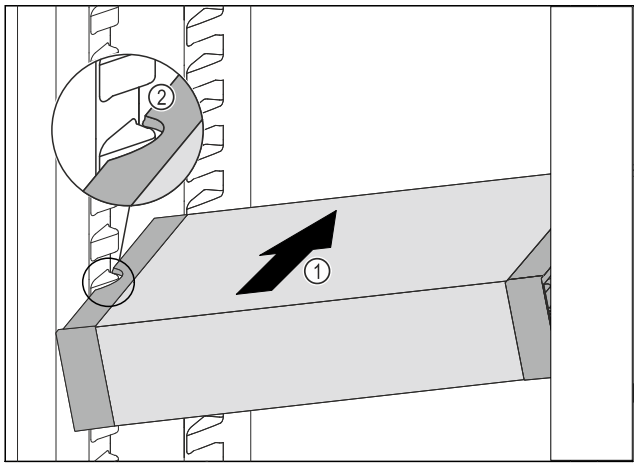

Fig. 107

▶ Insert the VarioSafe into the fridge section at an angle *Fig. 107 (1)* until the recesses in the side *Fig. 107 (2)* of the VarioSafe are at the level of the support rib in the fridge section.

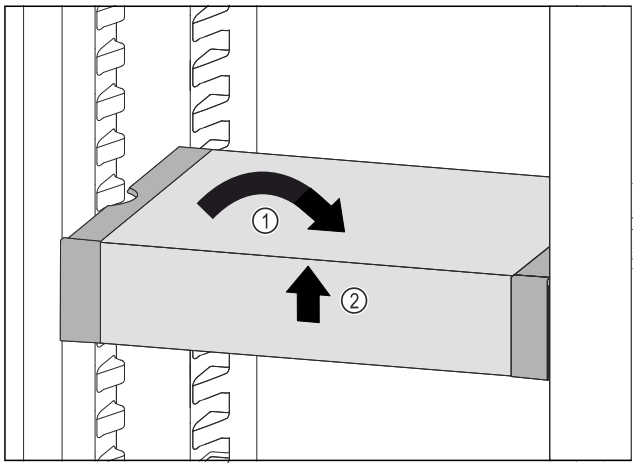

Fig. 108

▶ Set VarioSafe straight. *Fig. 108 (1)*
▶ Lift VarioSafe at the front. *Fig. 108 (2)*

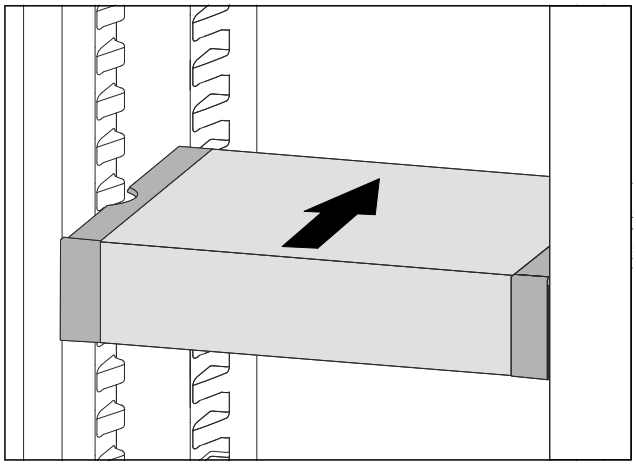

Fig. 109

▶ Lift VarioSafe up toward the front.
▶ Push VarioSafe in to the rear.
▶ Lower VarioSafe.
▷ VarioSafe audibly engages.
▷ VarioSafe is inserted.

8.4.2 Repositioning the VarioSafe

You can move the VarioSafe as a whole in the refrigerator compartment.

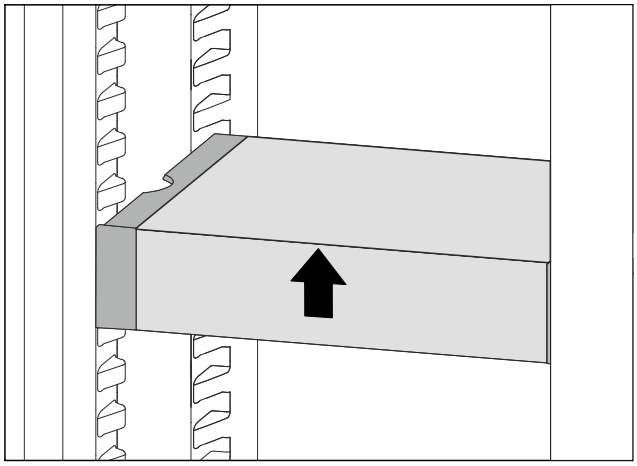

Fig. 110

▶ Lift VarioSafe at the front.

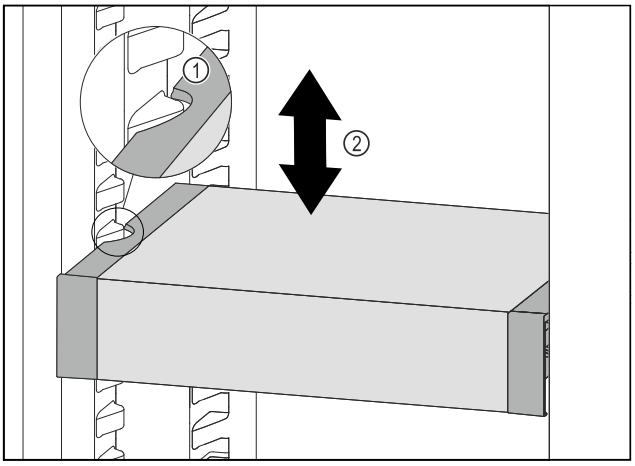

Fig. 111

- ▶ Pull VarioSafe forwards until the recesses in the side of the VarioSafe are at the level of the support rib in the refrigerator compartment. *Fig. 111 (1)*
- ▶ Move VarioSafe up or down in the refrigerator compartment until the desired height is reached. *Fig. 111 (2)*

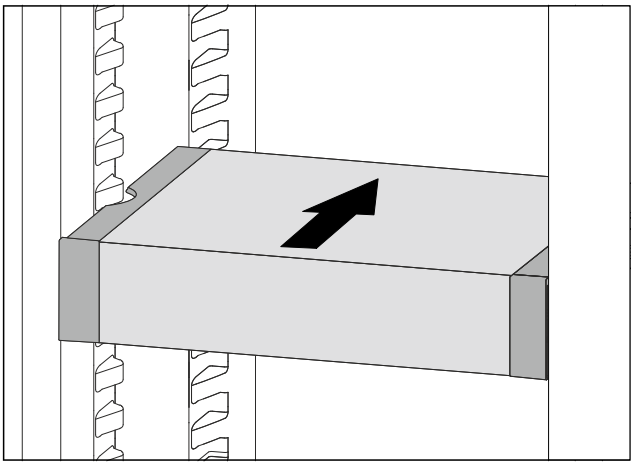

Fig. 112

- ▶ Lift VarioSafe at the front.
- ▶ Push VarioSafe in to the rear.
- ▷ VarioSafe audibly engages.
- ▷ VarioSafe is offset in height.

8.4.3 Moving the VarioSafe drawer

You can use the VarioSafe drawer at two different heights. If you would like to store taller foodstuffs in the VarioSafe drawer, slide the VarioSafe drawer in on the bottom rib. If you would like to store smaller foodstuffs in the VarioSafe drawer, slide the VarioSafe drawer in on the top rib.

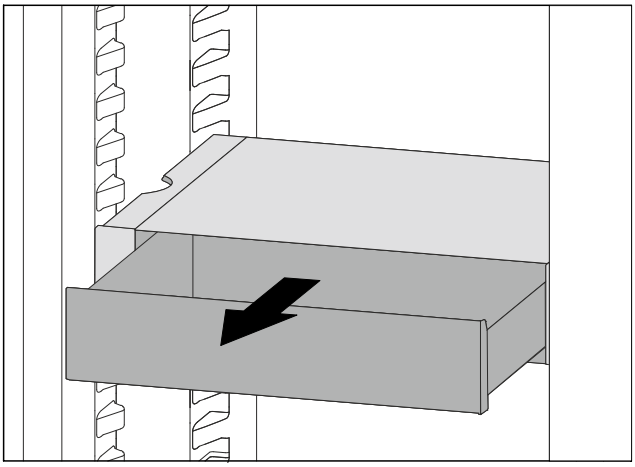

Fig. 113

- ▶ Pull out the VarioSafe drawer as far as it will go.
- ▶ Lift the VarioSafe drawer up at the front.
- ▶ Remove the VarioSafe drawer to the front.

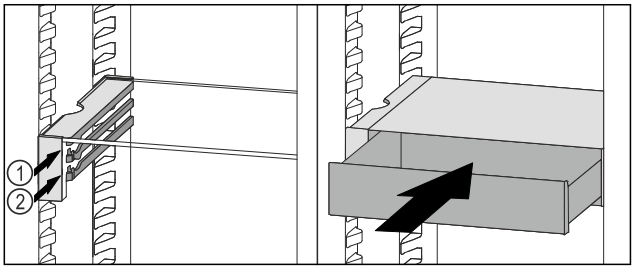

Fig. 114

- ▶ Lift the VarioSafe drawer up at the front.
- ▶ Place the VarioSafe drawer behind the stoppers on desired rib *Fig. 114 (1)* or *Fig. 114 (2)*.
- ▷ VarioSafe drawer is offset in height.

8.4.4 Removing the VarioSafe

You can remove the VarioSafe as a whole.

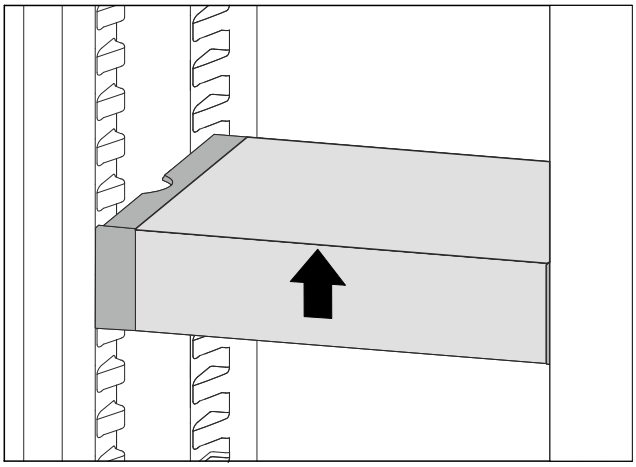

Fig. 115

- ▶ Lift VarioSafe at the front.

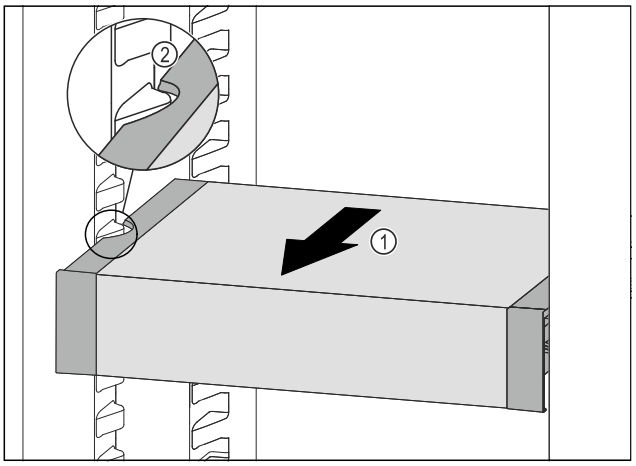

Fig. 116

- ▶ Pull VarioSafe forwards *Fig. 116 (1)* until the recesses in the side of the VarioSafe are at the level of the support rib in the fridge section. *Fig. 116 (2)*

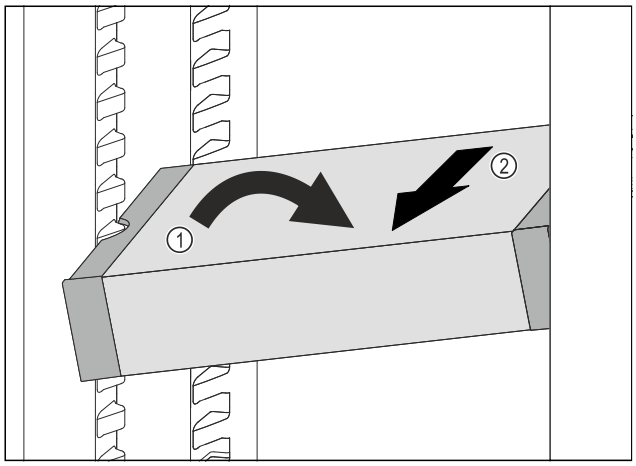

Fig. 117

▶ Set VarioSafe in refrigerator compartment at an angle. *Fig. 117 (1)*
▶ Take VarioSafe out to the front. *Fig. 117 (2)*
▷ VarioSafe is removed.

8.4.5 Disassembling the VarioSafe

You can disassemble the VarioSafe into its individual parts if you want to clean the VarioSafe or if you need to install or remove parts.

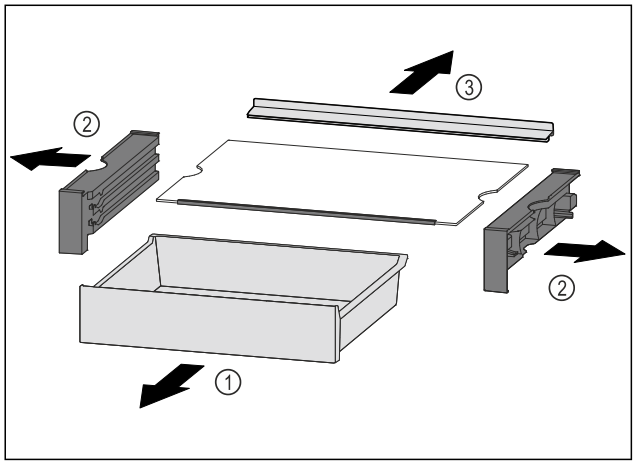

Fig. 118

▶ Remove VarioSafe as a whole. (see 8.4.4 Removing the VarioSafe)
▶ Disassemble VarioSafe according to the illustration.

8.5 Drawers

You can remove the drawers for cleaning.

You can remove the drawers to use VarioSpace.

The way to remove/insert the drawers varies depending on the pull-out system. Your appliance can contain various pull-out systems.

Note
The energy consumption increases and the cooling power goes down if ventilation is not sufficient.
▶ Leave the bottom drawer inside the appliance.
▶ Always keep the inside vents at the rear wall clear.

8.5.1 Drawer on appliance base or glass shelf

The drawer runs directly on the appliance base or on a glass shelf. There are no rails.

When you remove the drawers, you can use the glass shelves below them as storage shelves.

Removing drawer

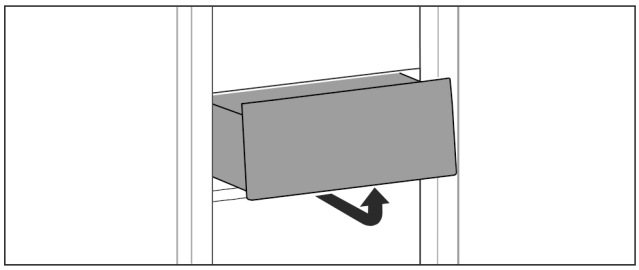

Fig. 119

▶ Remove drawer as shown in the illustration.

Inserting drawer

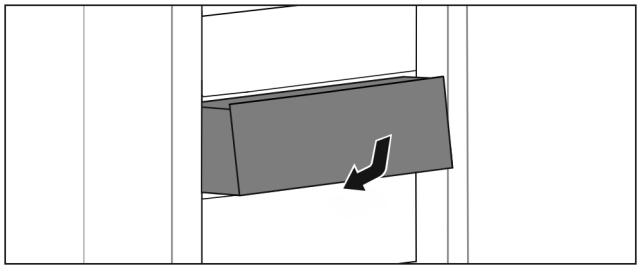

Fig. 120

▶ Insert drawer as shown in the illustration.

8.5.2 Drawer on rails

Removing drawer

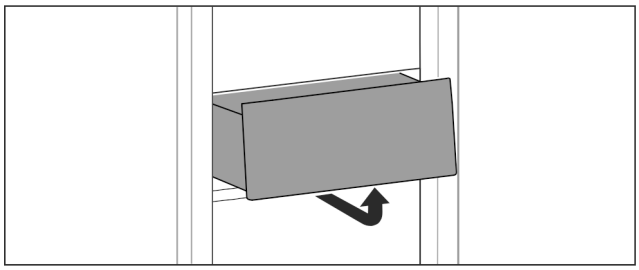

Fig. 121

▶ Remove drawer as shown in the illustration.

Inserting drawer

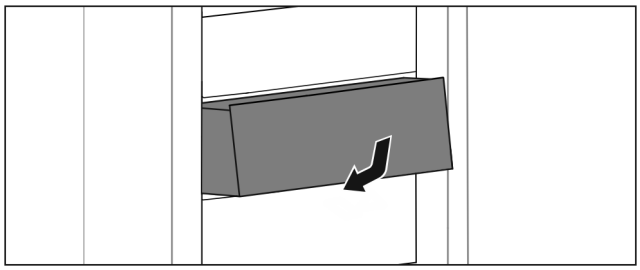

Fig. 122

▶ Insert drawer as shown in the illustration.

8.5.3 Drawer on telescopic rails

The drawer runs on extendible rails (telescopic rails). There are fully extendible telescopic rails and telescopic rails with partial pull-out. Drawers which are fully extendible can be pulled out fully from the appliance. Drawers with partial pull-out cannot be removed fully from the appliance. The system in your appliance depends on the type of appliance.

8.6 Compartment lid for EasyFresh Safe

The compartment lid ensures constant levels of humidity.

The compartment lid is directly on the drawer and can be covered by shelves or additional drawers.

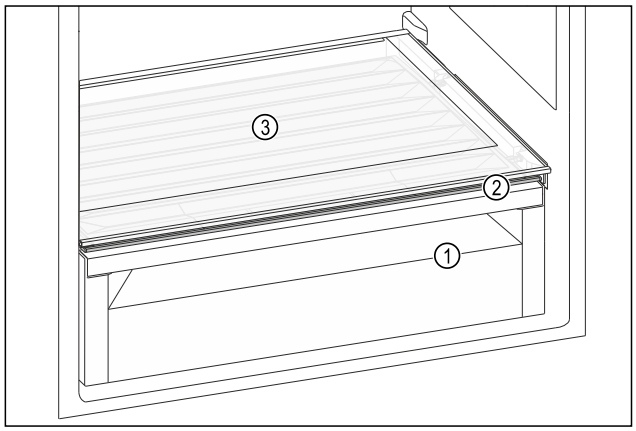

Fig. 123 Example illustration, compartment lid for EasyFresh Safe

(1) EasyFresh Safe
(2) Compartment lid for EasyFresh Safe
(3) Shelf

8.6.1 Reducing the air humidity in the drawer

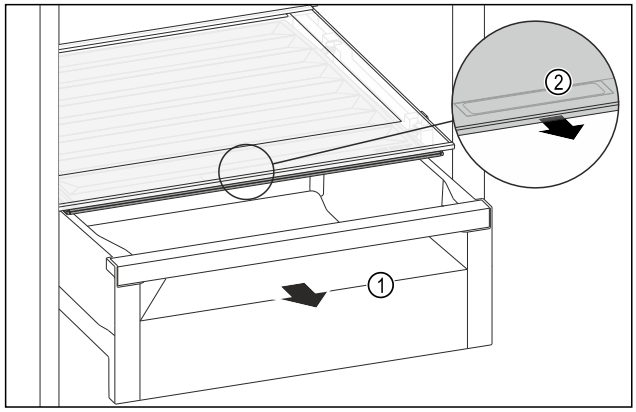

Fig. 124

▶ Pull out the drawer *Fig. 124 (1)*.
▶ Grasp the recessed grip *Fig. 124 (2)* on the compartment lid and pull the compartment lid forwards at the same time.
▷ When the drawer is closed, there is a small gap between the compartment lid and the drawer.

8.6.2 Increasing the air humidity in the drawer

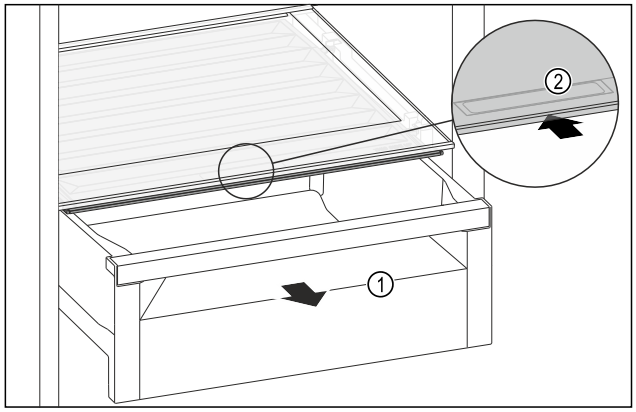

Fig. 125

▶ Pull out the drawer *Fig. 125 (1)*.
▶ Grasp the recessed grip *Fig. 125 (2)* on the compartment lid and push the compartment lid backwards at the same time.
▷ When the drawer is closed, the compartment lid seals with the drawer.

8.7 Glass shelves

You can remove the glass shelves under the drawers for cleaning.

You can remove the glass shelves under the drawers to use VarioSpace.

8.7.1 Removing / inserting the glass shelf

Make sure that the following requirements are fulfilled:

❑ Glass shelf under the drawer: The drawer has been removed. (see 8.5 Drawers)

Removing glass shelf

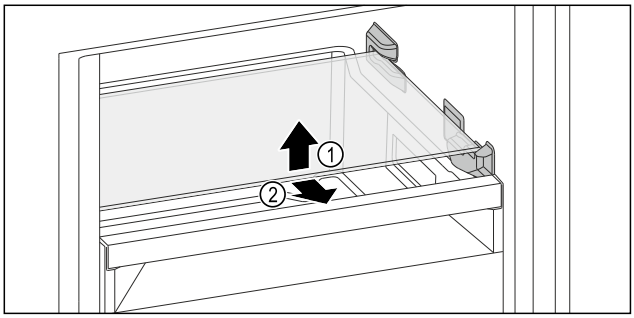

Fig. 126 Example illustration, glass shelf

▶ Lift the glass shelf forwards.
▶ Remove the glass shelf forwards.

Inserting glass shelf

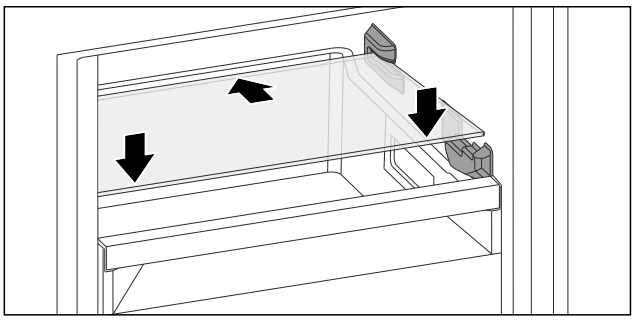

Fig. 127 Example illustration, glass shelf

▶ Place the glass shelf at an angle behind the stoppers.
▶ Lower glass shelf.
▶ Slide in glass shelf to the back.

8.8 EasyTwist-Ice*

With the EasyTwist-Ice you can make enough ice cubes for the whole household. The EasyTwist-Ice is supplied with water via a water tank.

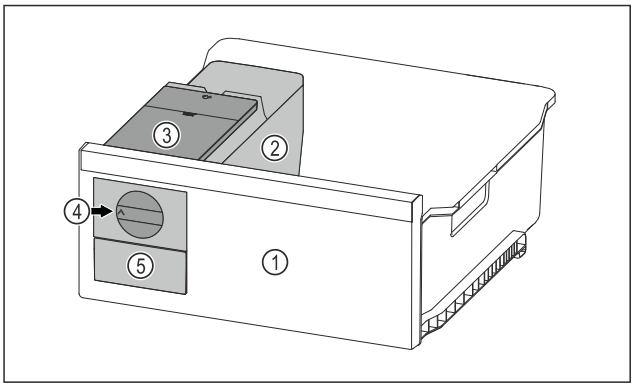

Fig. 128 Example illustration

(1) Freezer drawer with EasyTwist-Ice
(2) Body with ice cube tray
(3) Water tank
(4) Rotary knob
(5) Ice cube drawer

Note
Do not change the position of the freezer drawer with the EasyTwist-Ice in the appliance.

8.8.1 Making ice cubes

The amount of ice cubes you can make in a given period of time with the EasyTwist-Ice depends on the freezer temperature of the appliance. The lower the temperature in the appliance, the more ice cubes you can make.

Maximum number of ice cubes in the ice cube tray:	20 ice cubes
Maximum capacity of the ice cube drawer:	40 ice cubes (equivalent to two ice cube batches)
More information about the time needed for ice cube production:	(see 10.1 Technical specifications)

Make sure that the following requirements are fulfilled:

❑ Components of the EasyTwist-Ice have been cleaned.

Filling the water tank

WARNING
Risk of poisoning due to contaminated water!
▶ Only fill the water tank with potable water.

NOTICE
Sugar-content liquids!
Damage to EasyTwist-Ice.
▶ Only fill with cold drinking water.

Note
Using filtered, decarbonised water ensures the best-tasting drinking water for your ice cubes.
This water quality can be achieved using a table water filter of the kind available in trade retail outlets.
▶ Always fill the water tank only with filtered, decarbonised drinking water.

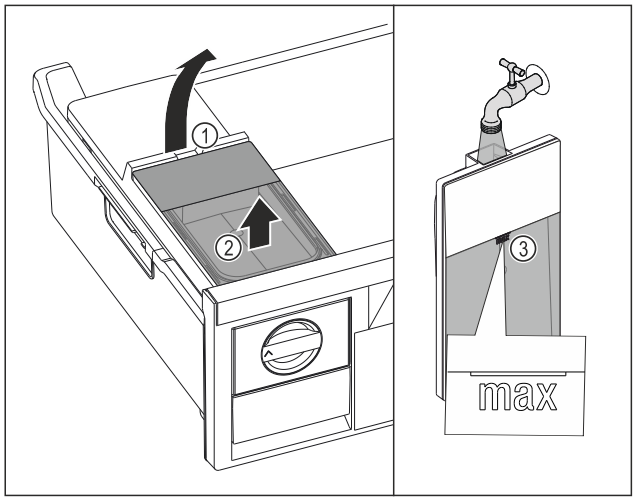

Fig. 129

▶ Pull out freezer drawer as far as it will go.
▶ Lift the water tank at the recess *Fig. 129 (1)*.
▶ Remove the water tank by lifting it upwards. *Fig. 129 (2)*
▶ Fill the water tank with drinking water up to the mark *Fig. 129 (3)*.

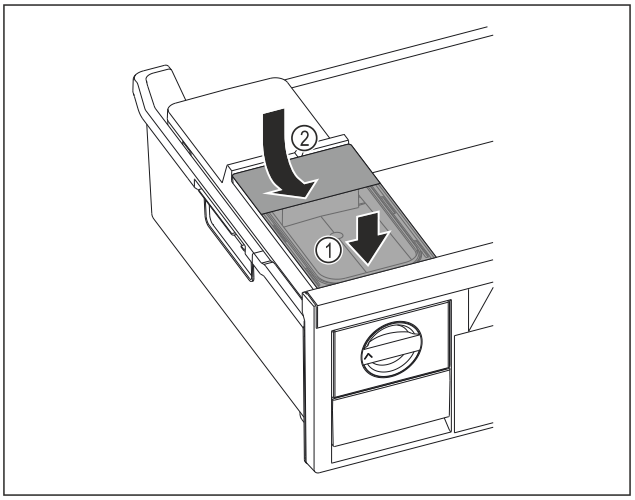

Fig. 130

▶ Position the water tank at the front. *Fig. 130 (1)*
▶ Lower the water tank at the rear. *Fig. 130 (2)*
▶ Slide in the freezer drawer.

Releasing the ice cubes

Make sure that the following requirements are fulfilled:

❑ The required time for the production of ice cubes has been observed. (see 10.1 Technical specifications)
❑ Freezer drawer is fully inserted.
❑ Ice cube drawer is fully inserted.

▶ Turn the rotary knob *Fig. 128 (4)* clockwise as far as it will go.
▷ Ice cubes fall from the ice cube tray into the ice cube drawer *Fig. 128 (5)*.
If all the ice cubes do not come out of the ice cube tray:
▶ Turn the rotary knob clockwise several times to the stop.

8.9 VarioSpace

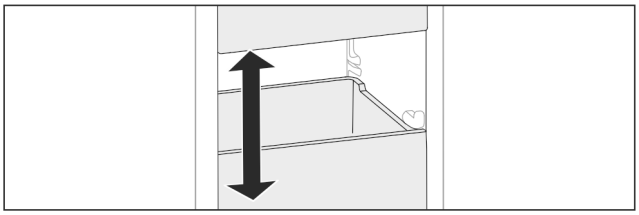

Fig. 131

You can remove drawers and glass panels from your appliance. This provides more room for large food items such as poultry, joints of meat, large game, and tall baked products. You can then freeze these items whole for later preparation.
▶ Note the weight limits on the drawers and glass panels (see 10.1 Technical specifications) .

8.10 Bottle holder

8.10.1 Using the bottle holder

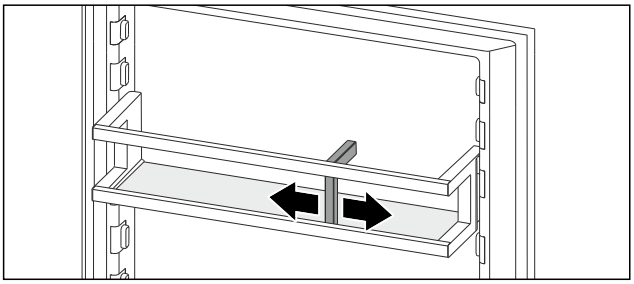

Fig. 132

▶ Push the bottle holder onto the bottles.
▷ The bottles are prevented from falling over.

8.11 Freezer pack*

Freezer packs prevent the temperature rising too quickly should there be a power cut.

The freezer packs are in the drawer.

8.11.1 Using the freezer pack

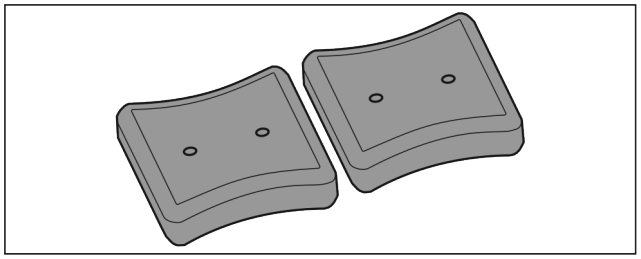

Fig. 133

When the freezer packs are fully frozen:

▶ Place on the frozen goods in the top, front part of the freezer.

8.12 FlexCube*

The FlexCube has different sized openings, so you can store small items such as tubes, open yoghurt pots or quail eggs in it. The FlexCube fits into all Liebherr door racks, for example. If necessary, you can also set up several FlexCubes next to each other.

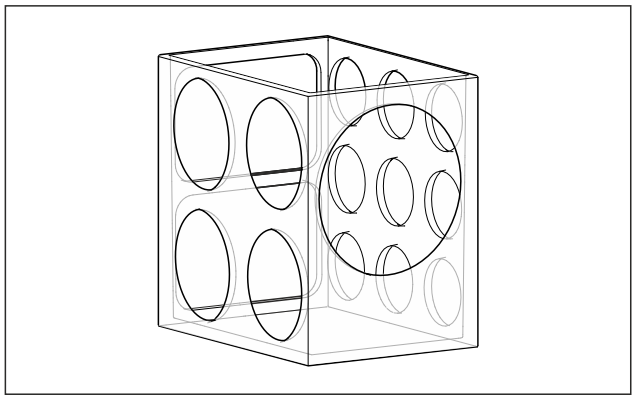

Fig. 134 Example illustration

Note
These accessories can be purchased from the Liebherr-Hausgeräte shop at home.liebherr.com/shop/de/deu/zubehor.html.

8.12.1 Using the FlexCube

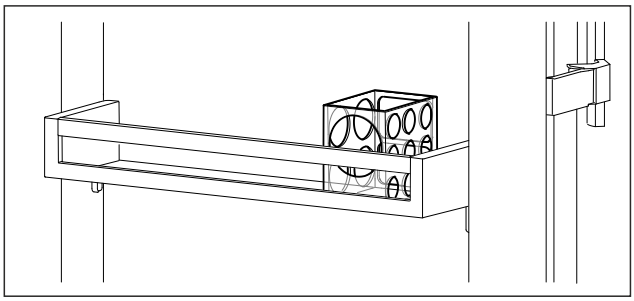

Fig. 135 Example illustration

▶ Insert the FlexCube in the door rack.

-or-

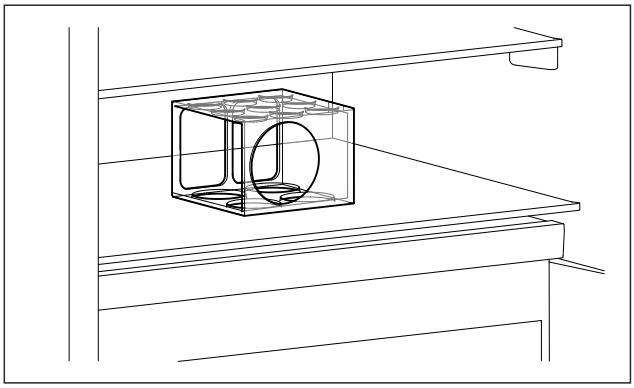

Fig. 136 Example illustration

▶ Place FlexCube on shelf.

▶ Sort small parts into the FlexCube for storage.

9 Maintenance

9.1 FreshAir carbon filter

The FreshAir carbon filter is in the compartment above the fan.

It guarantees the best air quality.

❑ Replace the carbon filter every 6 months.
When the reminder is set, a message on the display prompts you to change it.
❑ The carbon filter can be disposed of with the regular household waste.

Note
FreshAir activated charcoal filters can be purchased from the Liebherr-Hausgeräte store at home.liebherr.com/shop/de/deu/zubehor.html.

9.1.1 Removing the FreshAir carbon filter

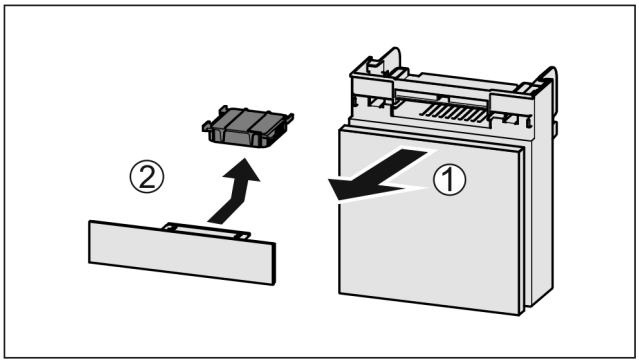

Fig. 137

▶ Pull out the compartment *Fig. 137 (1)*.
▶ Remove the carbon filter *Fig. 137 (2)*.

9.1.2 Inserting the FreshAir carbon filter

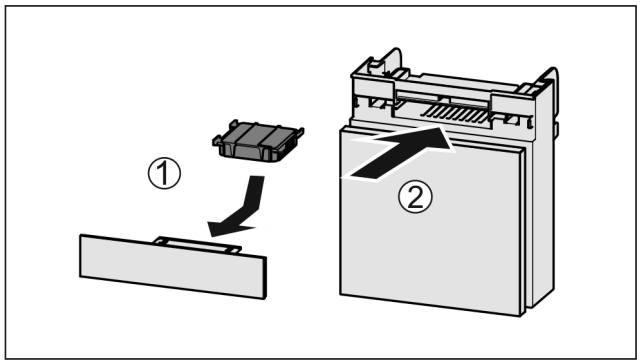

Fig. 138

▶ Insert the carbon filter as shown in the diagram *Fig. 138 (1)*.
▷ The carbon filter clicks into place.
If the carbon filter is pointing downwards:
▶ Push the compartment in *Fig. 138 (2)*.
▷ The carbon filter is now ready for use.

9.2 Disassembling / assembling pull-out systems

9.2.1 Notes on disassembly

You can disassemble some of the pull-out systems for cleaning. Your appliance can contain a variety of pull-out systems.

The following pull-out systems can be disassembled or cannot be disassembled:

Pull-out system	can be disassembled / cannot be disassembled
Drawer on appliance base or glass shelf	cannot be disassembled
Drawer on rails	cannot be disassembled

9.3 Compartment lid for EasyFresh Safe

You can remove the compartment lid for cleaning.

9.3.1 Removing the compartment lid

Ensure that the following requirements are met:

❑ The shelf directly above the drawer has been removed. (see 8.2 Shelves)
❑ The drawer directly below the compartment lid has been removed. (see 8.5 Drawers)

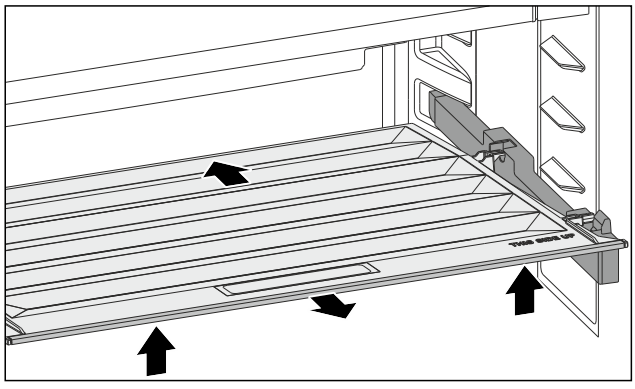

Fig. 139

▶ Push the compartment lid backwards.
▶ Lift the compartment lid forwards.
▶ Remove the compartment lid forwards and upwards at an angle.

9.3.2 Inserting the compartment lid

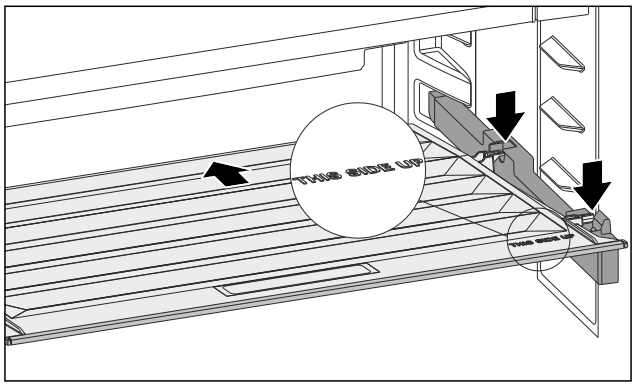

Fig. 140

If the THIS SIDE UP lettering is at the top:
▶ Insert the rear retaining parts into the relevant rear openings.
▶ Push the compartment lid backwards.
▶ Lower the compartment lid forwards and engage the front retaining parts into the openings.
▶ Move the compartment lid into the required position.

9.4 Defrosting the appliance

9.4.1 Defrosting the fridge compartment

Defrosting is performed automatically. The water from the thawing process drains through the outlet and evaporates.

Water drops or a thin layer of frost or ice can form on the back wall; this is a completely normal part of the appliance's function. This must not be removed.*

A layer of frost or ice can from briefly due to the energy-optimised control of the device.*

▶ Clean the drain opening at regular intervals. (see 9.5 Cleaning the appliance)

9.4.2 Defrosting the freezer compartment with NoFrost

Defrosting is performed automatically with the NoFrost system. The moisture is deposited on the evaporator, is periodically defrosted and evaporates.

The appliance does not have to be defrosted.

9.5 Cleaning the appliance

9.5.1 Ready

WARNING
Danger of electric shock!
▶ Remove the refrigerator connector or interrupt the power supply.

WARNING
Risk of fire
▶ Do not damage the refrigeration circuit.

▶ Empty the appliance.

▶ Remove mains connector.
-or-
▶ Activate CleaningMode. (see CleaningMode)

9.5.2 Clean the housing

NOTICE
Improper cleaning!
Damage to the appliance.
▶ Only use soft cleaning cloths and ph-neutral all-purpose cleaners.
▶ Do not uses abrasive sponges or steel wool which may cause scratches.
▶ Do not use any sharp or abrasive cleaning agents, nor any that contain sand, chloride or acid.

WARNING
Risk of injury and damage as a result of hot steam!
Hot steam can lead to burns and can damage the surfaces.
▶ Do not use any steam cleaners!

▶ Wipe the housing down with soft, clean cloth. If very dirty, use lukewarm water with a neutral cleaner. Glass surfaces can also be cleaned with glass cleaner.

9.5.3 Cleaning the interior

NOTICE
Improper cleaning!
Damage to the appliance.
▶ Only use soft cleaning cloths and ph-neutral all-purpose cleaners.
▶ Do not uses abrasive sponges or steel wool which may cause scratches.
▶ Do not use any sharp or abrasive cleaning agents, nor any that contain sand, chloride or acid.

▶ Plastic surfaces: clean by hand with a soft clean cloth, lukewarm water and a little detergent.
▶ Metal surfaces: clean by hand with a soft clean cloth, lukewarm water and a little detergent.
▶ Drain hole: remove deposits using a thin item (for example a cotton bud).

9.5.4 Cleaning the dry rear panel*

You can remove the dry rear panel for cleaning.

Removing the rear panel

▶ Remove all equipment parts.

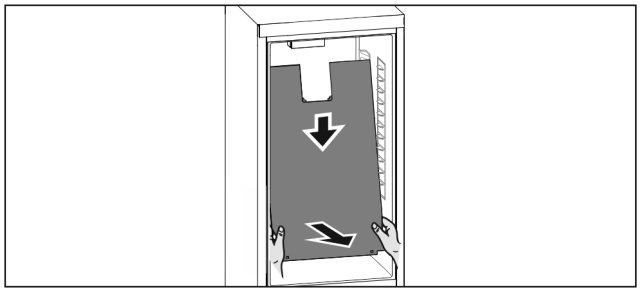

Fig. 141

▶ Hold the rear panel with both hands at the bottom and pull downward vigorously at the same time.
▶ Pull the rear panel out to the front by the bottom end.
▷ The rear panel has been removed.
If you want to continue operating the appliance with the rear panel removed:
▶ Set the *D-Value* to *D2*. (see D-Value*)

Inserting the rear panel

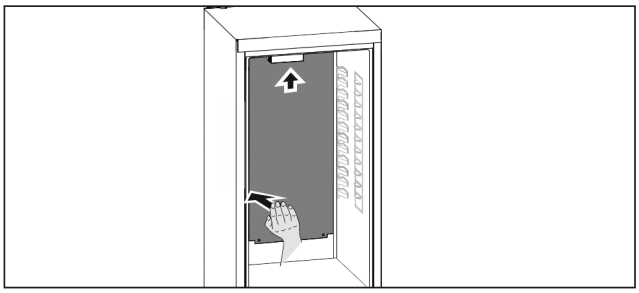

Fig. 142

▶ Make sure the appliance is completely empty.
▶ Slide in the rear panel from below to the top.
▶ Press back vigorously on the left-hand side of the rear panel.
▷ The rear panel clicks into place.
▶ Insert the equipment parts.
▶ Set the *D-Value* to *D1*. (see D-Value*)

9.5.5 Clean the components

NOTICE
Improper cleaning!
Damage to the appliance.
▶ Only use soft cleaning cloths and ph-neutral all-purpose cleaners.
▶ Do not uses abrasive sponges or steel wool which may cause scratches.
▶ Do not use any sharp or abrasive cleaning agents, nor any that contain sand, chloride or acid.

Clean with a soft, clean cloth, lukewarm water and some detergent:

- Door rack*
- Shelf
- Dividing shelf*
- VarioSafe*
- Compartment lid for EasyFresh Safe
- Drawer
- Components of the EasyTwist-Ice*

Clean with a damp cloth:

- Retractable rails
  Please note: The grease in the tracks is used for lubrication and must not be removed!

Wash in the dishwasher up to 60 °C:

- Door rack*
- Bottle rack
- Holder of the dividing shelf*
- Ice cube tray*
- FlexCube*

▶ To disassemble components: see the relevant section.
▶ Clean the components.

9.5.6 Cleaning the EasyTwist-Ice*

Clean the EasyTwist-Ice in the following situations:

- First use
- Not using for more than 48 hours
- When cleaning is required

Dismantling the EasyTwist-Ice

Make sure that the following requirements are fulfilled:

❑ The drawer has been removed. (see 8.5 Drawers)
❑ The drawer is placed on a table.

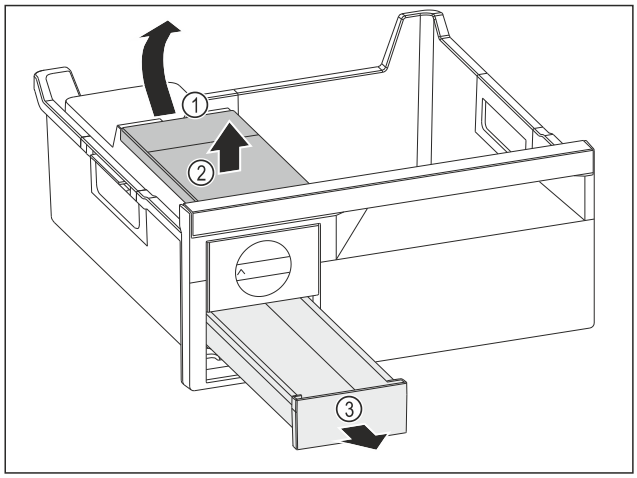

Fig. 143

- ▶ Removing the water tank: Lift the water tank by the recess *Fig. 143 (1)*.
- ▶ Remove the water tank *Fig. 143 (2)* upwards.
- ▶ Remove the ice cube drawer *Fig. 143 (3)* to the front.

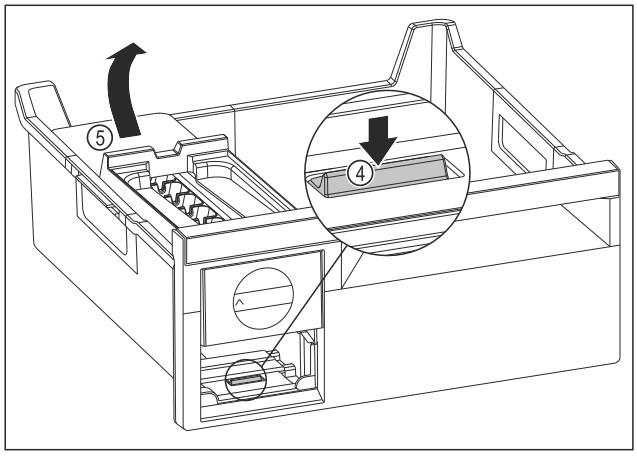

Fig. 144

- ▶ Removing the EasyTwist-Ice body: Use your finger to push the tab *Fig. 144 (4)* down and use your other hand to lift the EasyTwist-Ice body *Fig. 144 (5)* from behind at the same time.
- ▶ Remove the EasyTwist-Ice body from the freezer drawer.

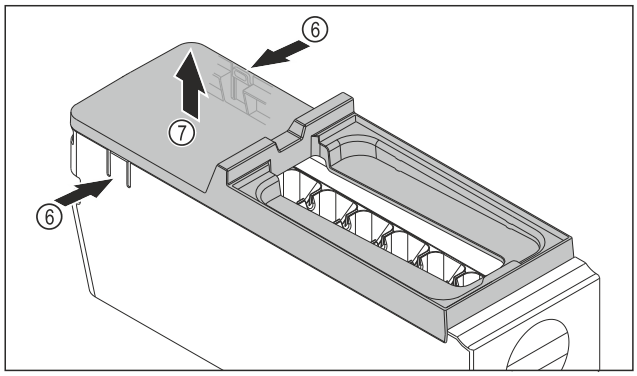

Fig. 145

- ▶ Removing the EasyTwist-Ice body cover: Push the tabs *Fig. 145 (6)* on both sides of the EasyTwist-Ice body with one hand.
- ▶ Use the other hand to remove the cover *Fig. 145 (7)* upwards.
- ▷ EasyTwist-Ice is dismantled into four parts. (see Fig. 146)

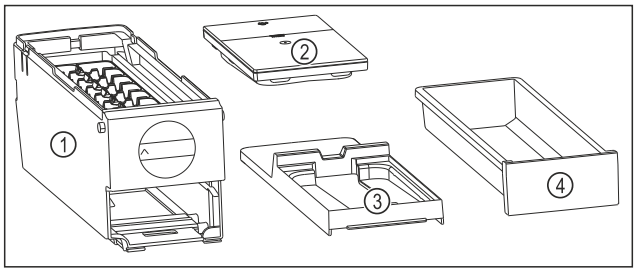

Fig. 146 Components of the EasyTwist-Ice

(1) EasyTwist-Ice body with ice cube tray
(2) Water tank
(3) Cover
(4) Ice cube drawer

NOTICE

Risk of damage due to improper dismantling!

Equipment breaking, jumping and cracking. If you dismantle the EasyTwist-Ice body further, you may damage the rotary knob or other parts of the EasyTwist-Ice body.

- ▶ Only dismantle the EasyTwist-Ice into the components shown. (see Fig. 146)
- ▶ Clean the EasyTwist-Ice body *Fig. 146 (1)* as a whole.

Cleaning the EasyTwist-Ice

Make sure that the following requirements are fulfilled:

- ❑ The EasyTwist-Ice is dismantled. (see Dismantling the EasyTwist-Ice)

- ▶ Clean the ice cube drawer, water tank, cover and Easy-Twist-Ice body with warm water and a little detergent.
- ▶ Dry all cleaned components thoroughly with a dry cloth.
- ▷ The EasyTwist-Ice is clean.

Installing the EasyTwist-Ice

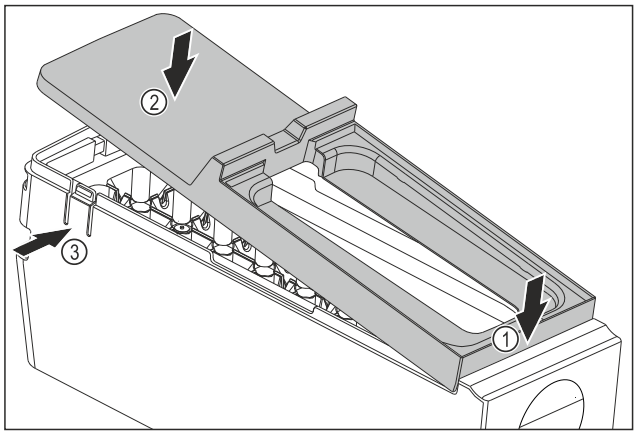

Fig. 147

- ▶ Installing the EasyTwist-Ice body cover: Place the cover on the front. *Fig. 147 (1)*
- ▶ Lower the cover at the rear. *Fig. 147 (2)*
- ▷ The cover locks into both tabs *Fig. 147 (3)* audibly.

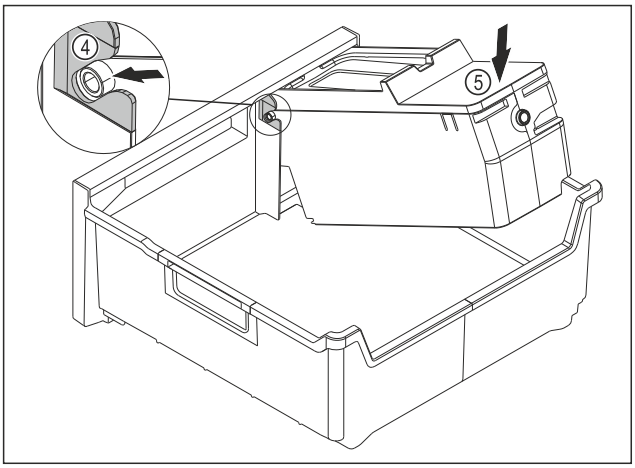

Fig. 148

▶ Installing the EasyTwist-Ice body: Push the axes for the EasyTwist-Ice body into the guides *Fig. 148 (4)*.
▶ Press the EasyTwist-Ice body *Fig. 148 (5)* down at the back.
▷ The EasyTwist-Ice body locks in audibly.

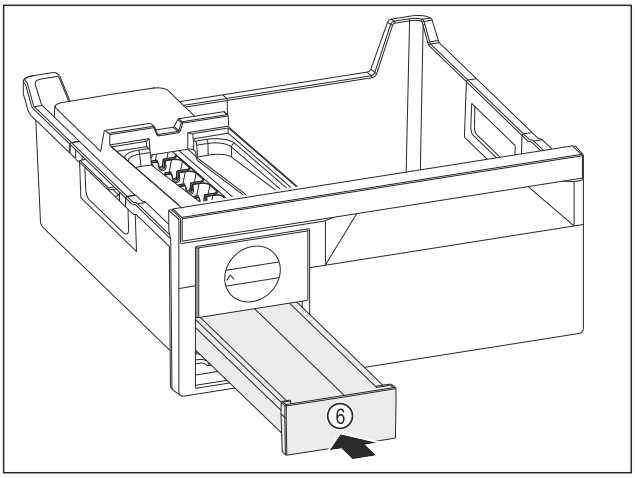

Fig. 149

▶ Insert the ice cube drawer *Fig. 149 (6)*.

WARNING
Risk of poisoning due to contaminated water!
▶ Only fill the water tank with potable water.

▶ Fill the water tank with water.
▶ Insert the water tank.
▶ Insert the drawer. (see 8.5 Drawers)
If you are using unfiltered water:
▶ Dispose of ice cubes that were produced 24 hours after initial ice cube production.
-or-
If you are using filtered water:
▶ Dispose of ice cubes that were produced 48 hours after initial ice cube production.

9.5.7 After cleaning

▶ Wipe the appliance and the components dry.
▶ Connect and switch on the appliance.
▶ Activate SuperFrost (see 7.2 Appliance functions) .
The temperature is cold enough:
▶ Place the food inside.
▶ Repeat cleaning regularly.

10 Customer help

10.1 Technical specifications

Temperature range	
Cooling	2 °C to 9 °C
Freeze	-26 °C to -15 °C

Maximum ice cube quantity / 24 hours	
Freezer compartment	see type plate under “Freezing capacity .../ 24 h”

Maximum loading weight for the equipment			
Equipment	Appliance width 600 mm (see installation instructions, device dimensions)	Appliance width 700 mm (see installation instructions, device dimensions)	Appliance width 750 mm (see installation instructions, device dimensions)
Drawer on glass shelf (see 8.5.1 Drawer on appliance base or glass shelf)	15 kg	--	23 kg

Ice cube production with EasyTwist-Ice*	
Time required at -18 °C	approx. 5.5 hours
Time required with SuperFrost activated	approx. 3 hours

Lighting	
Class[1]	Light source
This product contains one or more energy efficiency class G light sources.	LED

[1] *The appliance may contain light sources with different energy efficiency classes. The lowest energy efficiency class is indicated.*

10.2 Operating noises

The appliance makes different noises when it is on.
- At **higher temperatures** the appliance uses less energy but works for longer. It is **quieter**.
- At **lower temperatures** the food is cooled faster. It is **louder**.

Examples:
- Functions on (see 7.2 Appliance functions)
- Fan running
- Food recently added
- High ambient temperature
- Door open for a while

Noise	Possible cause	Type of noise
Bubbling and splashing	Coolant flowing into the cooling circuit.	Normal operating noise

Noise	Possible cause	Type of noise
Hissing	Coolant sprays into the cooling circuit.	Normal operating noise
Humming	The appliance is cooling. The volume depends on the cooling output.	Normal operating noise
Humming and rustling	The fan is running.	Normal operating noise
Clicking	Components are switched on and off.	Normal switching noise
Rattling or humming	Valves or flaps are working.	Normal switching noise

Noise	Possible cause	Type of noise	Lifting
Vibration	Improper setup	Defective noise	Level the appliance using the adjustable feet.

Noise	Possible cause	Type of noise	Lifting
Rattling	Components, items inside the appliance	Defective noise	Secure components. Leave enough space between the items.

10.3 Technical fault

Your appliance is designed and built to ensure it works reliably and has a long service life. In the unlikely event that a fault occurs during operation, please check whether it is due to an operating error. If so, you will be charged for the callout and repair costs even if it falls within the warranty period.

You can fix the following faults yourself.

10.3.1 Appliance function

Defect	Cause	Remedy
The appliance is not working.	→ The appliance is not switched on.	▶ Switch the appliance on.
	→ The power plug is not properly plugged into the socket.	▶ Check the power plug.
	→ There is something wrong with the power outlet fuse.	▶ Check the fuse.
	→ Power cut	▶ Keep the appliance closed. ▶ Safeguarding food: Place cold packs on top of food or use another freezer if the power cut lasts longer. ▶ Do not re-freeze defrosted food,
	→ The IEC socket is not plugged into the appliance correctly.	▶ Check the IEC socket.
Temperature is not cold enough.	→ The appliance door is not closed properly.	▶ Close the appliance door.
	→ The ambient temperature is too high.	▶ Problem solution: (see 2.4 Appliance range of use)
	→ The appliance was opened too many times or for too long.	▶ Wait to see if the required temperature corrects itself. If not, contact Customer Service. (see 10.4 Customer Service)
	→ Too much fresh food was placed inside without SuperFrost.	▶ Solution: (see SuperFrost)
	→ The temperature is set incorrectly.	▶ Turn down the temperature and check after 24 hours.
	→ The appliance is too close to a heat source (oven, radiator, etc).	▶ Move the appliance or the heat source.
The temperature shown on the display is higher than the actual temperature in the appliance.	→ Appliance door was open for a long time and the door alarm was triggered automatically. This causes the appliance to cool more vigorously.	▶ Close appliance door.

Defect	Cause	Remedy
The door seal is defective or needs to be replaced for another reason.	→ The door seal can be replaced. It can be replaced without the need for special tools.	▶ Contact Customer Service. (see 10.4 Customer Service)
The appliance builds up too much ice or condensation.	→ The door seal may have slipped out of its groove.	▶ Check that the door seal is well fitted in the groove.
The exterior surfaces of the appliance are warm.*	→ The heat of the refrigeration circuit is used to avoid condensation.	▶ This is normal.

10.3.2 Features

Defect	Cause	Remedy
The internal light does not come on.	→ The appliance is not switched on.	▶ Switch the appliance on.
	→ The door was open for longer than 15 minutes.	▶ Interior lighting switches off automatically after about 15 minutes when the door is open.
	→ The LED interior light is faulty or the lid is damaged.	▶ Contact Customer Service. (see 10.4 Customer Service)

10.4 Customer Service

First check whether you can rectify the fault yourself (see 10 Customer help) . If you cannot rectify the problem, contact Customer Service.

You can find the address in the enclosed brochure “Liebherr-Service” or at home.liebherr.com/service.

WARNING
Unprofessional repair!
Injuries.
- ▶ Have any repairs and action - not expressly specified - on the appliance and mains cable carried out by service personnel only. (see 9 Maintenance)
- ▶ A damaged mains cable may only be replaced by the manufacturer, the manufacturer’s Customer Service or a similarly qualified person.
- ▶ In the case of appliances with an IEC connector, the change may be made by the customer.

10.4.1 Contacting Customer Service

Make sure that the following appliance information is available:

- ❑ Appliance name (model and index)
- ❑ Service no. (Service)
- ❑ Serial no. (S no.)

▶ Call up the appliance information via the display. (see Device information)

-or-

▶ Refer to the type plate for appliance information. (see 10.5 Model plate)

▶ Note down the appliance information.
▶ Notify customer service: Report errors and the appliance information.
▷ This will help us to provide you with a faster, more accurate service.
▶ Follow further instructions from Customer Service.

10.5 Model plate

The model plate is behind the drawers on the inside of the appliance.

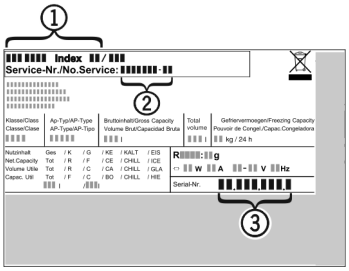

Fig. 150

(1) Appliance description **(3)** Serial no.
(2) Service no.

▶ Note the data on the model plate.

11 Shutting down

▶ Empty the appliance.
▶ Switch off appliance. (see Switching the appliance off and on)
▶ Pull the mains plug out of the socket.
▶ Remove the IEC socket if required: Pull the IEC socket out of the appliance plug and move it to the left and right at the same time.
▶ Clean appliance. (see 9.5 Cleaning the appliance)
▶ Leave the door open, so that no unpleasant odours arise.

12 Disposal

Ensure that the following requirements are met:

- ❑ Meaning of the symbols on the appliance: are familiar. (see 1.14 Symbols on the appliance)
- ❑ Notes on disposal are familiar. (see 1.8 Disposal)

12.1 Preparing the appliance for disposal

▶ Shutting your appliance down. (see 11 Shutting down)

12.2 Disposing of the appliance in an environmentally friendly manner

WARNING
Leaking coolant and oil!
Fire. The coolant contained in the appliance is eco-friendly, but also flammable. The oil contained in the appliance is flammable. Escaping coolant and oil can ignite if the concentration is high enough and in contact with an external heat source.
▶ Do not damage the pipelines of the coolant circuit and the compressor.

▶ Observe the notes on transporting the appliance.
▶ Remove the appliance without damaging it.
▶ Dispose of appliance according to specifications.



home.liebherr.com/fridge-manuals

EN fridge/freezer

Issue date: 20251128

Part number index: 7083580-03

Liebherr-Hausgeräte Marica EOOD
Bezirk Plovdiv
4202 Radinovo
Bulgarien

tehnoteka

https://tehnoteka.rs

Ovaj dokument je originalno proizveden i objavljen od strane proizvođača, brenda Liebherr, i preuzet je sa njihove zvanične stranice. S obzirom na ovu činjenicu, Tehnoteka ističe da ne preuzima odgovornost za tačnost, celovitost ili pouzdanost informacija, podataka, mišljenja, saveta ili izjava sadržanih u ovom dokumentu.

Napominjemo da Tehnoteka nema ovlašćenje da izvrši bilo kakve izmene ili dopune na ovom dokumentu, stoga nismo odgovorni za eventualne greške, propuste ili netačnosti koje se mogu naći unutar njega. Tehnoteka ne odgovara za štetu nanesenu korisnicima pri upotrebi netačnih podataka. Ukoliko imate dodatna pitanja o proizvodu, ljubazno vas molimo da kontaktirate direktno proizvođača kako biste dobili sve detaljne informacije.

Za najnovije informacije o ceni, dostupnim akcijama i tehničkim karakteristikama proizvoda koji se pominje u ovom dokumentu, molimo posetite našu stranicu klikom na sledeći link:

https://tehnoteka.rs/p/liebherr-kombinovani-frizider-cnd-5703-akcija-cena/