tehnoteka

https://tehnoteka.rs

Uputstvo za upotrebu (EN)

LIEBHERR kombinovani frizider CBNsdc 573i Plus

LIEBHERR



Tehnoteka je online destinacija za upoređivanje cena i karakteristika bele tehnike, potrošačke elektronike i IT uređaja kod trgovinskih lanaca i internet prodavnica u Srbiji. Naša stranica vam omogućava da istražite najnovije informacije, detaljne karakteristike i konkurentne cene proizvoda.

Posetite nas i uživajte u ekskluzivnom iskustvu pametne kupovine klikom na link:

https://tehnoteka.rs/p/liebherr-kombinovani-frizider-cbnsdc-573i-plus-akcija-cena/

User Guide

Quality, Design and Innovation

home.liebherr.com/fridge-manuals

LIEBHERR

Contents

1 Appliance at a glance..... 3
1.1 Scope of delivery..... 3
1.2 Overview of the appliance and equipment..... 3
1.3 SmartDevice..... 4
1.4 Appliance range of use..... 4
1.5 Conformity..... 4
1.6 SVHC substances according to REACH regulation. 4
1.7 EPREL database..... 4
1.8 Spare parts..... 5

2 General safety instructions..... 5

3 Functionality of the Touch & Swipe display..... 6
3.1 Navigation and symbol explanation..... 6
3.2 Menus..... 6
3.3 Sleep mode..... 7

4 Putting into operation..... 7
4.1 Switching on appliance (first use)..... 7
4.2 Putting InfinitySpring into operation*..... 8
4.3 Starting the IceMaker for the first time*..... 8
4.4 Starting the EasyTwist-Ice for the first time*..... 8
4.5 Starting the HydroBreeze for the first time*..... 8

5 Storage..... 8
5.1 Information regarding storage..... 8
5.2 Fridge compartment..... 8
5.3 BioFresh..... 8
5.4 Freezer compartment..... 9
5.5 Storage times..... 10

6 Saving energy..... 10

7 Controls..... 11
7.1 Controls and displays..... 11
7.1.1 Status display..... 11
7.1.2 Display symbols..... 11
7.2 Appliance functions..... 11
7.2.1 Notes on the appliance functions..... 11
Switching the appliance off and on..... 11
Switching temperature zone off and on..... 12
WiFi..... 13
Temperature..... 13
Temperature unit..... 14
BioFresh B-Value..... 14
D-Value..... 15
SuperCool*..... 15
VarioTemp*..... 15
SuperFrost..... 16
Start defrosting cycle..... 17
PartyMode..... 17
HolidayMode*..... 18
SabbathMode..... 18
EnergySaver..... 19
HydroBreeze*..... 19
IceMaker / MaxIce *..... 20
IceMaker water supply*..... 21
TubeClean *..... 21
CleaningMode..... 22
Display brightness..... 22
Door alarm..... 22
Input lock..... 23
Language..... 23
Device information..... 24
Software..... 24
Reminder..... 24
Demo mode..... 24
Resetting to factory settings..... 25
7.3 Messages..... 26
7.3.1 Overview of warnings..... 26
7.3.2 Ending warnings..... 26
7.3.3 Overview of reminders..... 27
7.3.4 Ending reminders..... 27

8 Features..... 28
8.1 Door rack..... 28
8.2 Shelves..... 30
8.3 Dividing shelf..... 30
8.4 VarioSafe *..... 31
8.5 InfinitySpring*..... 33
8.6 Adjustable bottle shelf..... 33
8.7 Drawers..... 34
8.8 Compartment lid for Fruit & Vegetable Safe..... 35
8.9 HydroBreeze*..... 36
8.10 Glass shelves..... 37
8.11 EasyTwist-Ice*..... 37
8.12 IceMaker*..... 38
8.13 VarioSpace*..... 39
8.14 Butter dish*..... 39
8.15 Egg rack*..... 39
8.16 Bottle holder*..... 39
8.17 FlexSystem*..... 39
8.18 Ice cube tray with cover*..... 40
8.19 Flexible ice compartment divider*..... 40
8.20 FlexCube*..... 41

9 Maintenance..... 41
9.1 FreshAir carbon filter..... 41
9.2 Water tank*..... 42
9.3 Water filter*..... 42
9.4 Disassembling / assembling pull-out systems..... 43

9.5 Removing / inserting the variable bottle rack..... 43
9.6 Compartment lid for Fruit & Vegetable Safe..... 44
9.7 Defrosting the appliance..... 44
9.8 Cleaning the appliance..... 44

10 Customer help..... 47
10.1 Technical specifications..... 47
10.2 Operating noises..... 48
10.3 Technical fault..... 48
10.4 Customer Service..... 50
10.5 Model plate..... 50

11 Shutting down..... 50

12 Disposal..... 51
12.1 Preparing appliance for disposal..... 51
12.2 Disposing of the appliance in an environmentally friendly manner..... 51

The manufacturer is continually working on the further development of all types and models. Please be aware that we reserve the right to make changes to the shape, equipment and technology.

Symbol	Explanation
	**Read instructions** Please read the information in these instructions carefully to understand all of the benefits of your new appliance.
	**Additional information on the Internet** The digital manual with additional information and in other languages can be found via the QR code on the front of the manual or by entering the service number at **home.liebherr.com/fridge-manuals**. The service number can be found on the serial tag: 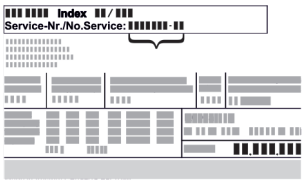 *Fig.* Example illustration
	**Check appliance** Check all parts for transport damage. If you have any complaints, please contact your agent or customer service.
	**Differences** These instructions apply to a range of models, so differences are possible. Sections that apply to certain models only are marked with an asterisk (*).
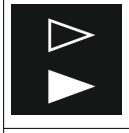	**Instructions and results** Instructions are marked with a ▶. Results are marked with a ▷.
	**Videos** Videos about the appliances are available on the YouTube channels of Liebherr-Hausgeräte.

Open source licences:

The appliance contains software components that use open source licences. Information on the open source licences used can be found here: **home.liebherr.com/open-source-licences**

These operating instructions apply to:

CBN ..	57..i / 76..i / 77..i
SBN ..	52..i

Note
If your appliance has an N in its appliance designation, it is a NoFrost appliance.

1 Appliance at a glance

1.1 Scope of delivery

Check all parts for transport damage. Contact your dealer or customer service in the event of complaints. (see 10.4 Customer Service)

Your new appliance comes with the following parts:
- Standalone appliance
- Features (depending on the model)
- Installation materials (depending on the model)
- “Quick Start Guide”
- “Installation Guide”
- Service Brochure

1.2 Overview of the appliance and equipment

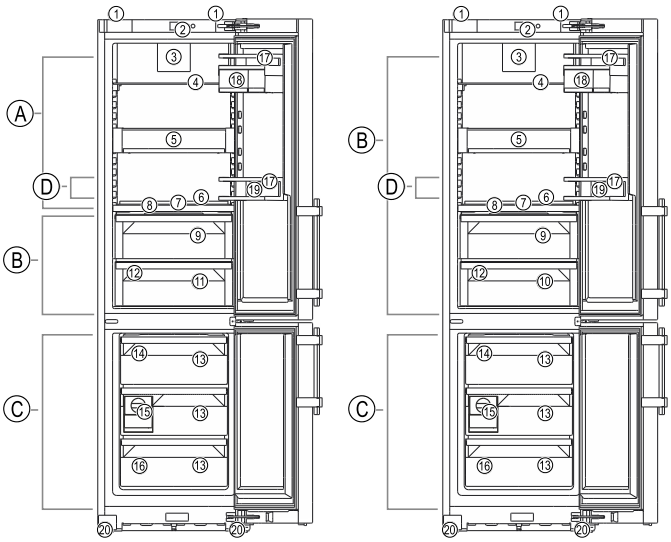

Fig. 1 Example illustration

Temperature range

(A) Fridge section
(B) BioFresh
(C) Freezer section
(D) Coldest area

Equipment

(1) Transport handle
(2) Controls
(3) Fan with FreshAir activated charcoal filter
(4) Divisible shelf
(5) VarioSafe*
(6) Variable bottle rack
(7) HydroBreeze*
(8) Compartment lid for Fruit & Vegetable Safe
(9) Fruit & Vegetable Safe
(10) Meat & Dairy Safe
(10) Fish & Seafood Safe*
(11) Drain opening
(12) Drawer
(13) IceMaker*
(14) EasyTwist-Ice*
(15) Type plate
(16) Door rack
(17) VarioBox*
(18) Bottle holder*
(19) Adjustable feet (front), transport rollers (rear), carrying loops at the top (rear) and bottom (front)

*** Depending on model and options**

Note

▶ Shelves, drawers and baskets are arranged for optimum energy efficiency when the appliance is delivered. Changing how the shelves, for example, are inserted in the fridge compartment does not have any impact on energy consumption.

1.3 SmartDevice

SmartDevice is the networking solution for your fridge-freezer.

If your appliance SmartDevice-enabled or compatible, you can quickly and easily connect your appliance to your WiFi. With the SmartDevice app, you can operate your appliance from a mobile device. Additional functions and setting options are available in the SmartDevice SmartDevice app.

SmartDevice-enabled appliance:	Your appliance is capable of being a SmartDevice. To be able to connect your device to WiFi, you need to download the SmartDevice app.
More information about SmartDevice:	**smartdevice.liebherr.com**
Downloading the SmartDevice app:	

After installing and configuring the SmartDevice, you can connect your appliance to the WiFi using the SmartDevice app and the WiFi appliance function (see WiFi) .

Note

The SmartDevice function is not available in the following countries: Russia, Belarus, Kazakhstan.

1.4 Appliance range of use

Intended use

The appliance is only suitable for cooling food products in a domestic or household-like environment. This includes, for example, use:

- in staff kitchens, bed and breakfast establishments,
- by guests in country houses, hotels, motels and other accommodation,
- for catering and similar services in the wholesale trade.

The appliance is not suitable as a built-in unit.

All other types of use are not permitted.

Foreseeable misuse

The following applications are expressly forbidden:

- Storing and refrigerating medicines, blood plasma, laboratory preparations or similar substances and products based on the Medical Device Directive 2007/47/EC
- Use in areas at risk of explosions

Misusing the appliance may lead to damage to the goods stored or they may spoil.

Climate classifications

Depending on the climate classification the appliance is designed to operate in restricted ambient temperatures. The climate classification applying to your appliance is printed on the rating plate.

Note

▶ Keep to the specified ambient temperatures in order to guarantee that the appliance works properly.

Climate classification	for ambient temperatures of
SN	10 °C to 32 °C
N	16 °C to 32 °C
ST	16 °C to 38 °C
T	16 °C to 43 °C
SN-ST	10 °C to 38 °C
SN-T	10 °C to 43 °C

1.5 Conformity

The refrigerant circuit has been tested for leaks. The appliance complies with the applicable safety regulations and with the corresponding directives.

For the market:	EU	The appliance complies with directive 2014/53/EU.
For the market:	GB	The appliance complies with Radio Equipment Regulations 2017 SI 2017 No. 1206.

The full text of the EU Declaration of Conformity is available on the following website: www.Liebherr.com

The BioFresh compartment meets the requirements of a cold storage compartment as set out in DIN EN 62552:2020.

1.6 SVHC substances according to REACH regulation

You can check whether your appliance contains SVHC substances according to REACH regulation at the following link: home.liebherr.com/de/deu/de/liebherr-erleben/nachhaltigkeit/umwelt/scip/scip.html

1.7 EPREL database

Details about energy labelling and ecodesign requirements will be available on the European product database (EPREL) from 1st March 2021. You can access the product database at the following link: https://eprel.ec.europa.eu/ You will be asked to enter the model ID. You can find the model ID on the nameplate.

1.8 Spare parts

The spare parts availability for functional parts and stockable parts of the equipment is 15 years.

2 General safety instructions

Please keep these operating instructions in a safe place so you can refer back to them at any time.

If you pass the appliance on, please hand these operating instructions to the next user.

Read these operating instructions carefully before use to ensure safe and correct use of the appliance. Follow the instructions, safety instructions and warning messages included at all times. They are important for ensuring you can operate and install the appliance safely and without any problems.

Danger for the user:

- This device can be used by children and people with impaired physical, sensory or mental abilities or with a lack of experience and knowledge provided that they are supervised or have received instruction in the safe use of this device, and about the resulting hazards.
  Children must not play with this appliance. Cleaning and user maintenance work must not be carried out by children without adult supervision. Children aged between 3 and 8 are allowed to load and unload the appliance. Children below the age of 3 must be kept away from the appliance unless they are under continuous adult supervision.
- The socket must be easily accessible so that the appliance can be disconnected quickly from the electricity in an emergency. It must not be located in the area behind the appliance.
- When disconnecting the appliance from the supply, always take hold of the plug. Do not pull the cable.
- In the event of a fault pull out the mains plug or deactivate the fuse.
- Do not damage the mains power cable. Do not operate the appliance with a defective mains power cable.
- Only customer service or other specially trained staff may repair or perform other operations on the appliance.
- Only assemble, connect and dispose of the appliance according to the instructions.
- The manufacturer is not liable for damage caused by a faulty fixed water connection.*

Fire hazard:

- The coolant used (information on the model plate) is ecofriendly but also flammable. Any leaking coolant may ignite.
  - Do not damage the refrigerant circuit pipes.
  - Do not handle ignition sources inside the appliance.
  - Do not use electrical appliances inside the appliance (e.g. steam cleaners, heaters, ice cream makers, etc.).
  - If the refrigerant leaks: remove any naked flames or ignition sources from the vicinity of the leakage point. Properly air the room. Inform customer services.
- Do not store explosives or sprays using combustible propellants such as butane, propane, pentane, etc. in the appliance. To identify these spray cans, look for the list of contents printed on the can, or a flame symbol. Gases possibly escaping may ignite due to electrical components.
- Keep burning candles, lamps and other items with naked flames away from the appliance so that they do not set the appliance on fire.
- Please be sure to store alcoholic drinks or other packaging containing alcohol in tightly closed containers. Any alcohol that leaks out may be ignited by electrical components.

Danger of tipping and falling:

- Do not misuse the plinth, drawers, doors etc. as a step or for support. This applies particularly to children.

Danger of food poisoning:

- Do not consume food which has been stored too long.

Danger of frostbite, numbness and pain:

- Avoid prolonged skin contact with cold surfaces or refrigerated/frozen goods or take protective measures, e.g wear gloves.

Danger of injury and damage:

- Hot steam can lead to injury. Do not use electrical heating or steam cleaning equipment, open flames or defrosting sprays to defrost.
- Do not use sharp implements to remove the ice.

Risk of crushing:

- Do not hold the hinge when opening and closing the door. Fingers may get caught.

Symbols on the appliance:



This symbol may be located on the compressor. It relates to the oil in the compressor and makes reference to the risk that: Swallowing or inhaling can be fatal. This advice is only relevant to recycling. There is no danger in normal operation.



This symbol is located on the compressor and indicates the danger of flammable materials. Do not remove the sticker.



This or a similar sticker may be located on the rear of the appliance. This sticker indicates that there are vacuum insulation panels (VIP) or perlite panels in the door and/or housing. This advice is only relevant to recycling. Do not remove the sticker.

Please note the warning messages and other specific advice in the other chapters:

⚠	DANGER	indicates an immediately hazardous situation which will lead to death or serious injuries if it is not avoided.
⚠	WARNING	indicates a hazardous situation which may lead to death or serious injuries if it is not avoided.
⚠	CAUTION	indicates a hazardous situation which may lead to minor or moderate injuries if it is not avoided.
	NOTICE	indicates a hazardous situation which may lead to damage to property if it is not avoided.
	Note	indicates useful instructions and tips.

3 Functionality of the Touch & Swipe display

You operate your appliance using the Touch & Swipe display. You select appliance functions in the Touch & Swipe display (hereafter referred to as display) by tapping them. If you do not perform any action on the display for 10 seconds, the display either jumps back to the higher-level menu or directly to the status display.

3.1 Navigation and symbol explanation

In the illustrations, different symbols are used to navigate the display. The following table describes these symbols.

Symbol	Description
	**Briefly touch the display:** Activates/deactivates function. Confirms selection. Opens submenu.
	**Touch the display for a specified time (e.g. 3 seconds):** Activates/deactivates function or value.
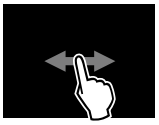	**Swipe left or right:** Navigate in the menu.
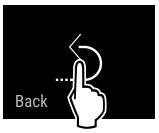	**Briefly touch the Back symbol:** Jumps back one menu level.
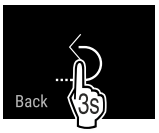	**Press and hold the Back symbol for 3 seconds:** Jumps back to the status display.
	**Arrow with clock:** It takes more than 10 seconds for the following message to appear in the display.
	**Arrow with a time indication:** It takes the specified amount of time until the following message appears in the display.
	**“Open Settings menu” symbol:** Navigates to the Settings menu and opens the settings menu. If necessary: Navigate to the desired function in the Settings menu. (see 3.2.1 Opening the Settings menu)
	**“Open Advanced menu” symbol:** Navigates to the Advanced menu and opens the advanced menu. If necessary: Navigate to the desired function in the Advanced menu. (see 3.2.2 Opening the expanded menu)
No action for 10 seconds	If you do not perform any action on the display for 10 seconds, the display either jumps back to the higher-level menu or directly to the status display.
Open door and close it again.	If you open the door and immediately close it again, the display jumps directly back to the status display.

Note: Illustrations of the display are shown in the English version.

3.2 Menus

The appliance functions are distributed over various menus:

Menu	Description
Main menu	When you switch the appliance on, you are automatically in the main menu. From here you can navigate to the most important appliance functions, to the Settings menu and to the Advanced menu.

*** Depending on model and options**

Menu	Description
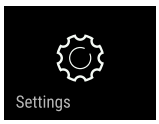 Settings menu	The Settings menu contains additional appliance functions for setting up your appliance.
Advanced menu	The advanced menu contains special appliance functions for setting up your appliance. Access to the Advanced menu is protected by the numerical code **1 5 1**.

3.2.1 Opening the Settings menu

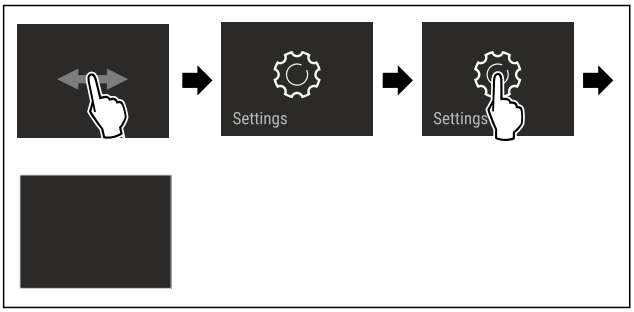

Fig. 2 Example illustration

▶ Carry out action steps according to the illustration.
▷ Settings menu is open.
▶ If necessary: Navigate to the desired function.

3.2.2 Opening the expanded menu



Fig. 3

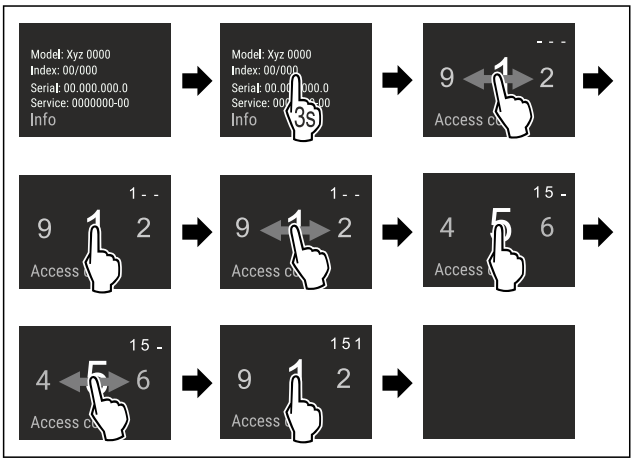

*Fig. 4 Example illustration, access with numerical code **151***

▶ Carry out action steps according to the illustration.
▷ The expanded menu is open.
▶ If necessary: Navigate to the desired function.

3.3 Sleep mode

If you do not touch the display for 1 minute, the display switches to sleep mode. In sleep mode, the display brightness is dimmed.

3.3.1 Ending sleep mode

▶ Touch the display briefly with your finger.
▷ Sleep mode is ended.

4 Putting into operation

4.1 Switching on appliance (first use)

Make sure that the following requirements are fulfilled:

- ❑ The appliance has been installed and connected in accordance with the installation instructions.
- ❑ All adhesive strips, adhesive and protective films and transport locks are removed from inside and on the appliance.
- ❑ All marketing leaflets are removed from the drawers.
- ❑ You are familiar with the functionality of the Touch & Swipe display. (see 3 Functionality of the Touch & Swipe display)

Switch on the appliance using the Touch & Swipe display:

▶ If the display is in sleep mode: Briefly touch the display.
▶ Carry out action steps according to the illustration.

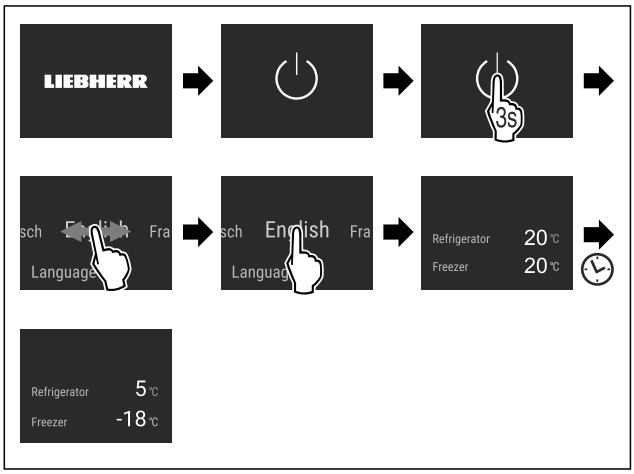

Fig. 5 Example illustration

▷ Status display appears.
▷ The appliance cools to the temperature set at the factory.
▷ The appliance starts in demo mode (status display with DEMO appears): If the appliance starts in demo mode, you can deactivate demo mode within the next 5 minutes. (see Demo mode)

More information:

- Start the InfinitySpring for the first time. (see 4.2 Putting InfinitySpring into operation*) *
- Start the IceMaker for the first time. (see 4.3 Starting the IceMaker for the first time*) *
- Start the EasyTwist-Ice for the first time. (see 4.4 Starting the EasyTwist-Ice for the first time*) *
- Start the HydroBreeze for the first time. (see 4.5 Starting the HydroBreeze for the first time*) *
- Start the SmartDevice for the first time. (see 1.3 SmartDevice) and (see WiFi)

Note
The manufacturer recommends:

▶ Stock with food: Wait for around 6 hours until the set temperature is reached.
▶ **Store frozen foods** at -18 °C or colder.
▶ Observe the notes on storing food. (see 5.1 Information regarding storage)

Note
Accessories can be purchased from the Liebherr-Hausgeräte store at home.liebherr.com/shop/de/deu/zubehor.html.

*** Depending on model and options**

4.2 Putting InfinitySpring into operation*

If your appliance is equipped with an InfinitySpring, **before the first use** you must bleed the water system for the InfinitySpring and clean the InfinitySpring.

Make sure that the following requirements are fulfilled:

- ❑ The water supply is connected. See the Installation Guide or installation instructions.
- ❑ The water tank is fitted. See the Installation Guide or installation instructions.
- ❑ The water filter is fitted. See the Installation Guide or installation instructions.*
- ❑ Appliance is properly connected.

4.2.1 Bleeding the water system

- ▶ Open the appliance door.
- ▶ Push a glass against the lower part of the InfinitySpring dispenser.
- ▷ The upper part moves out and air escapes or water flows into the glass.
- ▶ Continue until the water flows evenly into the glass.
- ▷ The water system is now bled.

4.2.2 Cleaning the InfinitySpring

(see 9.8.5 Cleaning the InfinitySpring *)

4.3 Starting the IceMaker for the first time*

If your appliance is equipped with IceMaker, you must clean the IceMaker **before using it for the first time**.

Make sure that the following requirements are fulfilled:

- ❑ The water supply has been connected. See Installation Guide or mounting instructions.*
- ❑ The appliance is properly connected.

- ▶ Clean the IceMaker. (see 9.8.7 Cleaning the EasyTwist-Ice*) *

4.4 Starting the EasyTwist-Ice for the first time*

If your appliance is equipped with EasyTwist-Ice, you must clean the EasyTwist-Ice **before using it for the first time**.

Make sure that the following requirements are fulfilled:

- ❑ The appliance is properly connected.

- ▶ Clean the EasyTwist-Ice. (see 9.8.7 Cleaning the EasyTwist-Ice*)
- ▶ Fill the water tank. (see Filling the water tank)

4.5 Starting the HydroBreeze for the first time*

If your appliance is equipped with HydroBreeze, you must clean the HydroBreeze **before using it for the first time**.

Make sure that the following requirements are fulfilled:

- ❑ The appliance is properly connected.

- ▶ Clean the HydroBreeze. (see 9.8.6 Cleaning the HydroBreeze*)
- ▶ Fill the water tank. (see 8.9.1 Fill the water tank)
- ▶ Activate HydroBreeze. (see HydroBreeze*)

5 Storage

5.1 Information regarding storage

WARNING
Risk of fire
- ▶ Do not use any electrical appliances in the food area of the appliance unless recommended by the manufacturer.

Note
The energy consumption increases and the cooling power goes down if ventilation is not sufficient.
- ▶ Always keep air slots clear.

Observe the following specifications for storage:

- Keep the air vents on the fan free.
- In the freezer compartment: Package food properly.
- Package or cover foods that readily take on or give off odours or taste in closed containers.
- Package raw meat or fish in clean, closed containers. This will prevent meat or fish from touching or dripping onto other food.
- Keep liquids in closed containers.
- Leave space between goods to ensure good air circulation.
- Store food according to the instructions on the packaging.
- Always observe the best-before date indicated on the packaging.

Note
Failure to follow these guidelines can lead to foodstuffs spoiling.

5.2 Fridge compartment

The air circulation in the appliance creates different temperature zones. You will find the different temperature zones in the appliance and equipment overview. (see 1.2 Overview of the appliance and equipment)

5.2.1 Arranging your food properly

- ▶ Upper area and door: Store butter, cheese, tinned food and tubes.
- ▶ Coldest temperature zone: Store perishable foods such as pre-cooked meals.

5.3 BioFresh

BioFresh will extend the storage time for some fresh foods compared to traditional refrigeration.

Note
If the temperature drops below 0 °C foods may freeze.
- ▶ Store cold-sensitive produce such as cucumbers, aubergines, courgettes and tropical fruit in the fridge compartment.

5.3.1 Fruit & Vegetable safe

This safe creates a storage climate of close to 0 °C. The compartment lid ensures constant levels of humidity. This storage climate is suitable for storing unpackaged food with high intrinsic moisture (for example, lettuce, vegetables, fruit).

The humidity in the compartment depends on the moisture content of the chilled goods placed in it, and also depends on how often the compartment is opened. You can regulate the humidity level.

Arranging your food properly

▶ Store unpackaged fruit and vegetables.
If the humidity is too high:
▶ Regulate the humidity.

5.3.2 Meat & Dairy safe

This safe creates a storage climate of close to 0 °C. This storage climate is suitable for more sensitive foods (e.g. dairy products, meat, fish, sausage).*

This safe creates a storage climate of close to 0 °C. This storage climate is suitable for more sensitive foods (e.g. dairy products, meat, fish, sausage).*

Arranging your food properly

▶ Store dry or packaged food.

5.3.3 Fish & Seafood safe -2°C | 0°C *

This safe creates a storage climate of between -2 °C and 0 °C. This storage climate is great for dry or packaged groceries (for example, dairy products, meat, fish, seafood, sausage).

This compartment includes a Fish & Seafood tray that you can move or take away.

You can set the temperature via the Touch & Swipe display. Dividing the compartment into different temperature zones is only possible with the Fish & Seafood tray inserted. (see Setting the temperature in the fridge section)

The following temperature combinations are possible:

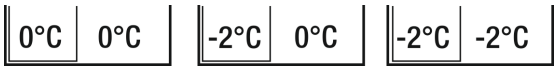

Fig. 6

Arranging your food properly

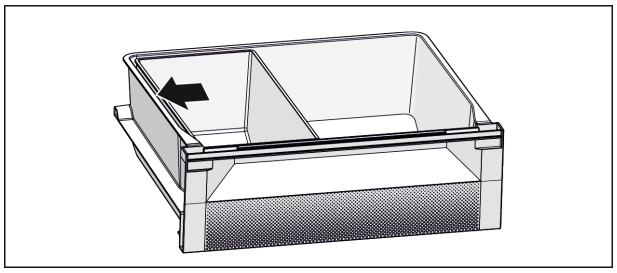

Fig. 7

▶ For an optimum cooling function: Position Fish & Seafood tray according to illustration (see Fig. 7) .
▶ Temperature zone -2 °C: Store fresh seafood or fish.
▶ Temperature zone 0 °C: Store dairy products or packaged meats.

Note
You can achieve the highest level of energy efficiency using the temperature combination **0 °C / 0 °C**.

Energy consumption is slightly higher using the temperature combination **-2 °C / 0 °C** and **-2 °C / -2 °C**.

5.4 Freezer compartment

Here, a dry, frosty storage climate is created at -18 °C. The frosty storage climate is suitable for storing frozen food for several months, for making ice cubes or freezing fresh food.

5.4.1 Freezing food

Freezing quantity

The maximum amount of fresh food that you can freeze within 24 hours is specified on the type plate (see 10.5 Model plate) under “Freezing capacity ... kg/24h”.

To ensure that food quickly freezes through, adhere to the following quantities per package:

- Fruit and vegetables up to 1 kg
- Meat up to 2.5 kg

Freezing food using SuperFrost

Depending on the quantity to be frozen, you can activate SuperFrost before freezing in order to achieve lower freezing temperatures. (see SuperFrost)

▶ Activate SuperFrost if the amount of food you have to freeze is more than approx. 2 kg.

The time at which you activate SuperFrost depends on the amount of food you have to freeze:

Freezing quantity	Time at which you should activate SuperFrost
Small amount of food to freeze	Activate SuperFrost about 6 hours before freezing. You can place the food in the freezer as soon as the appliance automatically deactivates SuperFrost.
Maximum amount of food to freeze	Activate SuperFrost about 24 hours before freezing. You can place the food in the freezer as soon as the appliance automatically deactivates SuperFrost.

Arranging your food properly

CAUTION
Risk of injury from broken glass!
Bottles and cans with beverages can burst during freezing. This applies in particular to carbonated beverages.

▶ Only freeze bottles and cans with beverages if you have activated the BottleTimer function in the SmartDevice app.

Freezing quantity	Arranging your food properly
Small amount of food to freeze	Place packaged food in the top drawer. If possible, place groceries at the back of the drawer near the rear wall.
Maximum amount of food to freeze	Distribute packaged groceries throughout all drawers, but only place frozen food in the bottom drawer. If possible, place groceries at the back of the drawer near the rear wall.

5.4.2 Defrosting food

WARNING
Risk of food poisoning!

▶ Do not re-freeze thawed food.
▶ Use defrosted foodstuff as soon as possible.

You can defrost food in several ways:

- In the fridge compartment
- In the microwave

*** Depending on model and options**

- In the oven/fan-assisted oven
- At room temperature

▶ Take out only as much food as necessary.

5.5 Storage times

Refer to the specified storage times as a guide.

In the case of foods with a minimum shelf life, the date indicated on the packaging still applies.

5.5.1 Fridge section

Always follow the best-before date stated on the packaging.

5.5.2 BioFresh

Recommended storage periods in the Meat & Dairy-Safe		
Butter	at 1 °C	up to 90 days
Hard cheese	at 1 °C	up to 110 days
Milk	at 1 °C	up to 12 days
Sausage, cold meats	at 1 °C	up to 8 days
Poultry	at 1 °C	up to 6 days
Pork	at 1 °C	up to 6 days
Beef	at 1 °C	up to 6 days
Game	at 1 °C	up to 6 days

Note

▶ Remember that high-protein foods perish quicker; shellfish and crustaceans do not last as long as fish, and fish does not last as long as meat.

Recommended storage periods in the Fruit & Vegetable-Safe		
Vegetables, salads		
Artichokes	at 1 °C	up to 14 days
Celery	at 1 °C	up to 28 days
Cauliflower	at 1 °C	up to 21 days
Broccoli	at 1 °C	up to 13 days
Chicory	at 1 °C	up to 27 days
Lettuce	at 1 °C	up to 19 days
Peas	at 1 °C	up to 14 days
Kale	at 1 °C	up to 14 days
Carrots	at 1 °C	up to 80 days
Garlic	at 1 °C	up to 160 days
Turnip	at 1 °C	up to 14 days
Lettuce	at 1 °C	up to 13 days
Herbs	at 1 °C	up to 13 days
Leeks	at 1 °C	up to 29 days
Mushrooms	at 1 °C	up to 7 days
Radishes	at 1 °C	up to 10 days
Brussels sprouts	at 1 °C	up to 20 days
Asparagus	at 1 °C	up to 18 days
Spinach	at 1 °C	up to 13 days
Savoy	at 1 °C	up to 20 days

Recommended storage periods in the Fruit & Vegetable-Safe		
Fruit		
Apricots	at 1 °C	up to 13 days
Apples	at 1 °C	up to 80 days
Pears	at 1 °C	up to 55 days
Blackberries	at 1 °C	up to 3 days
Dates	at 1 °C	up to 180 days
Strawberries	at 1 °C	up to 7 days
Figs	at 1 °C	up to 7 days
Blueberries	at 1 °C	up to 9 days
Raspberries	at 1 °C	up to 3 days
Currants	at 1 °C	up to 7 days
Sweet cherries	at 1 °C	up to 14 days
Kiwis	at 1 °C	up to 80 days
Peaches	at 1 °C	up to 13 days
Plums	at 1 °C	up to 20 days
Cranberries	at 1 °C	up to 60 days
Rhubarb	at 1 °C	up to 13 days
Gooseberries	at 1 °C	up to 13 days
Grapes	at 1 °C	up to 29 days

Recommended storage periods in the Fish & Seafood-Safe*		
Seafood		
Crabs	at -2 °C	up to 4 days
Mussels	at -2 °C	up to 6 days
Sushi	at -2 °C	up to 4 days
Fish	at -2 °C	up to 4 days

5.5.3 Freezer compartment

Recommended storage period for various types of food		
Ice cream	at -18 °C	2 to 6 months
Sausages, ham	at -18 °C	2 to 3 months
Bread, baked goods	at -18 °C	2 to 6 months
Game, pork	at -18 °C	6 to 9 months
Fatty fish	at -18 °C	2 to 6 months
Lean fish	at -18 °C	6 to 8 months
Cheese	at -18 °C	2 to 6 months
Poultry, beef	at -18 °C	6 to 12 months
Vegetables, fruit	at -18 °C	6 to 12 months

6 Saving energy

- Pay attention to good ventilation. Do not cover ventilation holes or grids.
- Always keep the fan air slits clear.
- Do not place the appliance in direct sunlight or near radiators or similar sources of heat.

*** Depending on model and options**

- If the appliance is placed directly next to an oven, the energy consumption may increase slightly. This is dependent on the service life and usage intensity of the oven.
- Energy consumption depends on the installation conditions, e.g. the ambient temperature (see 1.4 Appliance range of use) . A warmer ambient temperature can increase the energy consumption.
- Open the appliance for as short a time as possible.
- The lower the temperature is set the higher the energy consumption.
- Sort your food: home.liebherr.com/food.
- Keep all food properly packed and covered. This prevents frost from forming.
- Only take food out for as long as necessary so that it doesn't warm up too much.
- Inserting warm food: allow to cool down to room temperature first.
- Thaw frozen food in the refrigerator.
- If you intend to be on holiday for a long time empty the refrigerator and switch it off.*
- For longer periods of absence, use HolidayMode (see HolidayMode*) .*

7 Controls

7.1 Controls and displays

7.1.1 Status display

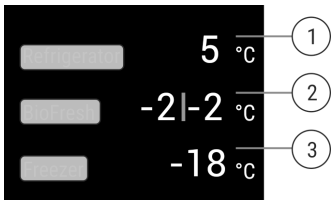

*Fig. 8 The status display shows the actual temperature.**

(1) Temperature display of the fridge section
(2) BioFresh temperature display (Fish & SeaFood-Safe)
(3) Freezer compartment temperature display

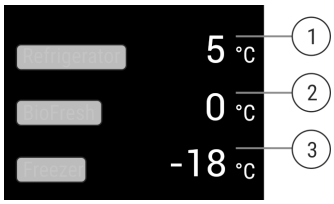

*Fig. 9 The status display shows the actual temperature.**

(1) Temperature display of the fridge section
(2) Temperature display BioFresh
(3) Freezer compartment temperature display

The status display shows the actual temperature and is the initial display. Navigation to the functions takes place from there.

7.1.2 Display symbols

Display symbols provide information on the current appliance status:

Symbol	Appliance status
	**Standby** The appliance or temperature zone is switched off.
	**Flashing number** Appliance is working. Temperature flashes until the set temperature is reached.
	
	**Flashing symbol** Appliance is working. Setting is made.
	

7.2 Appliance functions

7.2.1 Notes on the appliance functions

The appliance functions are set at the factory so that your appliance is fully functional.

Before you alter, activate or deactivate the device functions, make sure that the following requirements are met:

- ❑ You have read and understood the descriptions of how the display works. (see 3 Functionality of the Touch & Swipe display)
- ❑ You have familiarised yourself with the operating and display elements of your appliance.

Switching the appliance off and on

Use this function to switch the entire appliance off and on.

Switching off the appliance

When you switch the appliance off, then the previously saved settings are saved.

Make sure that the following requirements are fulfilled:

- ❑ Handling instructions (see 11 Shutting down) are carried out.



Fig. 10

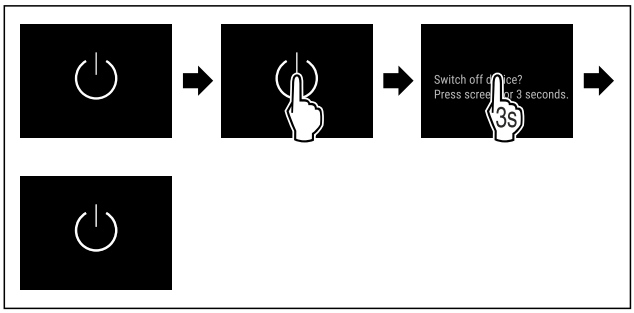

Fig. 11

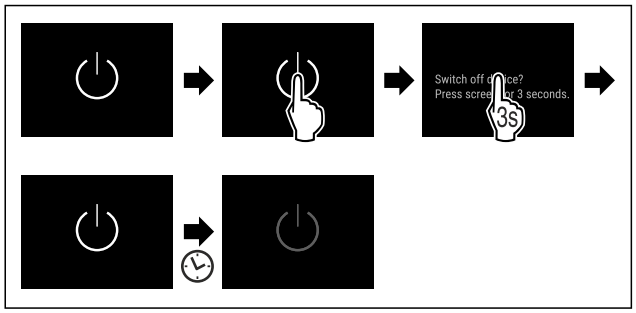

Fig. 11

▶ Carry out action steps according to the illustration.
▷ Appliance is switched off.
▷ The standby symbol appears in the display.
▷ Display turns black.

Switching on the appliance

If the display is in sleep mode:

▶ Briefly touch the display.

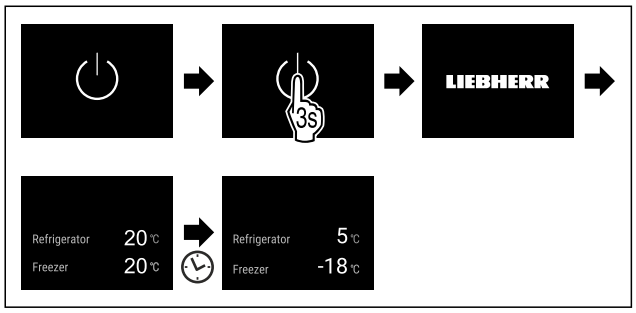

Fig. 12 Example illustration

▶ Carry out action steps according to the illustration.
When the appliance starts in demo mode:
▶ Deactivating demo mode. (see Deactivating demo mode)
▷ The appliance is switched on.
▷ Previous settings are restored.
▷ The appliance cools to the target temperature set.

Switching temperature zone off and on

You can switch temperature zones of the appliance off independently.

Switching the fridge compartment off

Make sure that the following requirements are fulfilled:

❑ Refrigerator compartment has been emptied.
❑ InfinitySpring water tank is empty.*

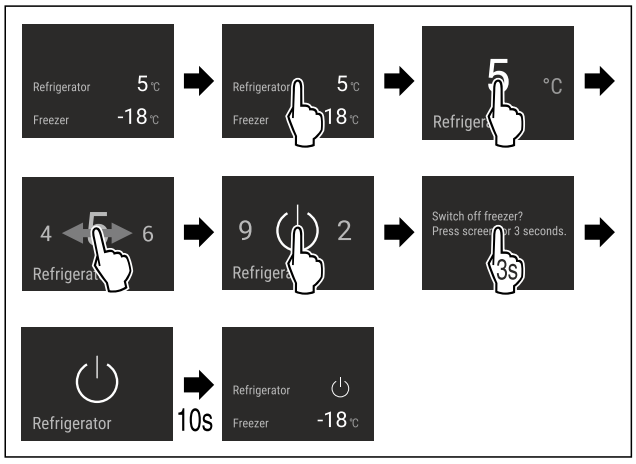

Fig. 13 Example illustration

▶ Carry out action steps according to the illustration.
▷ Refrigerator compartment is switched off.

Switching the freezer compartment off*

Make sure that the following requirements are fulfilled:

❑ Freezer compartment has been emptied.
❑ IceMaker is deactivated.*
❑ EasyTwist-Ice water tank is empty.*

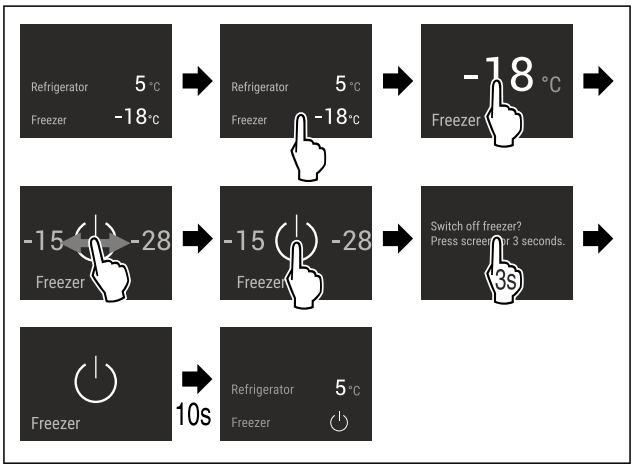

Fig. 14 Example illustration

▶ Carry out action steps according to the illustration.
▷ Freezer compartment is switched off.

Switching the fridge compartment on

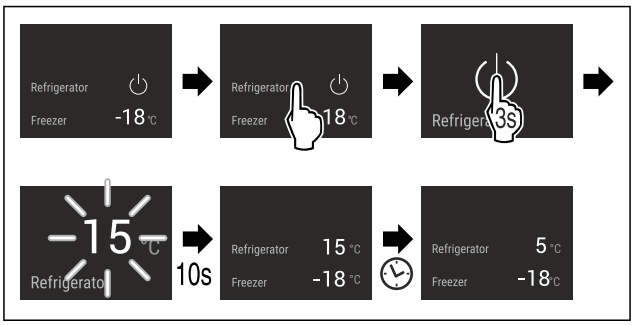

Fig. 15 Example illustration

▶ Carry out action steps according to the illustration.
▷ Refrigerator compartment is switched on.
▷ The appliance cools to the last set temperature.

Switching the freezer compartment on*

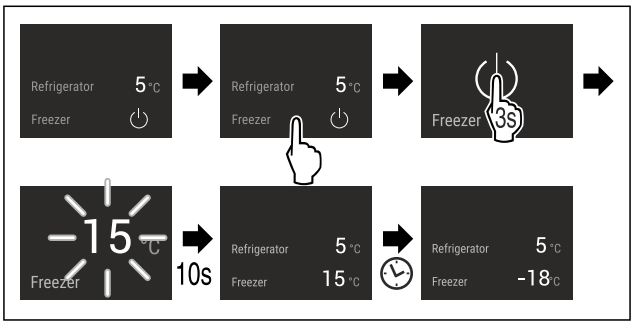

Fig. 16 Example illustration

▶ Carry out action steps according to the illustration.
▷ Freezer compartment is switched on.
▷ The appliance cools to the last set temperature.

*** Depending on model and options**

WiFi

Use this function to connect your appliance to WiFi. You can then operate it via the SmartDevice app on a mobile device. You can also use this function to disconnect or reset the WiFi connection.

More information on the SmartDevice: (see 1.3 SmartDevice)

Note
The SmartDevice function is not available in the following countries: Russia, Belarus, Kazakhstan.

Establishing the WiFi connection for the first time

Make sure that the following requirements are fulfilled:

- ❑ You have installed the SmartDevice app (see apps.home.liebherr.com).
- ❑ Registration in the SmartDevice app is completed.



Fig. 17

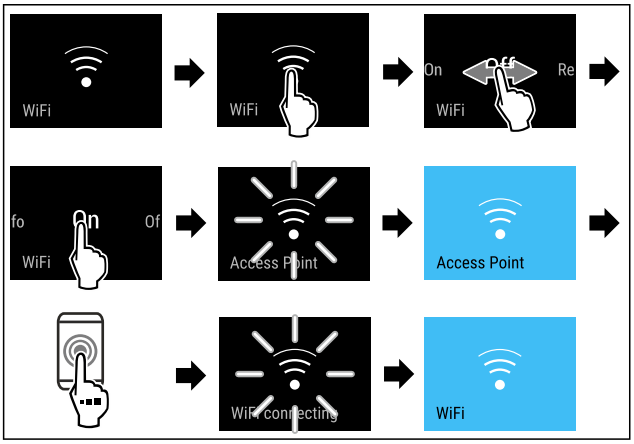

Fig. 18

▶ Carry out action steps according to the illustration.
▷ Connection is established.

Disconnecting from the WiFi



Fig. 19

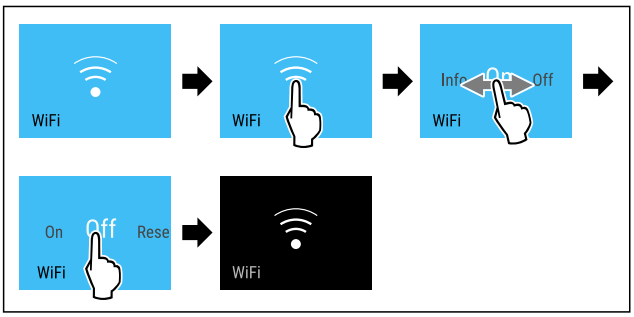

Fig. 20

▶ Carry out action steps according to the illustration.
▷ There is no connection.

Resetting the WiFi connection



Fig. 21

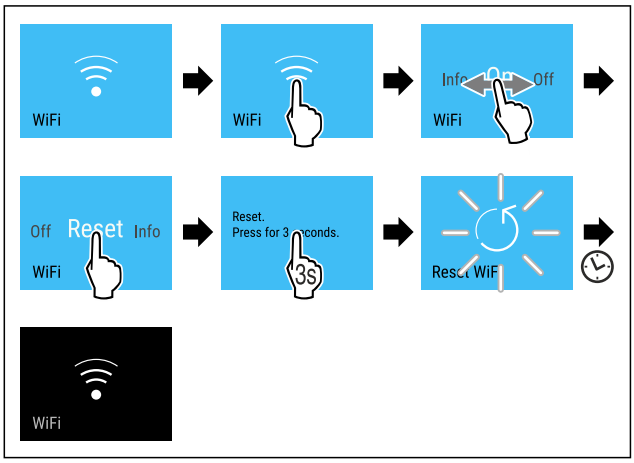

Fig. 22

▶ Carry out action steps according to the illustration.
▷ WiFi connection and other WiFi settings are reset to factory settings.

Showing information about the WiFi connection



Fig. 23

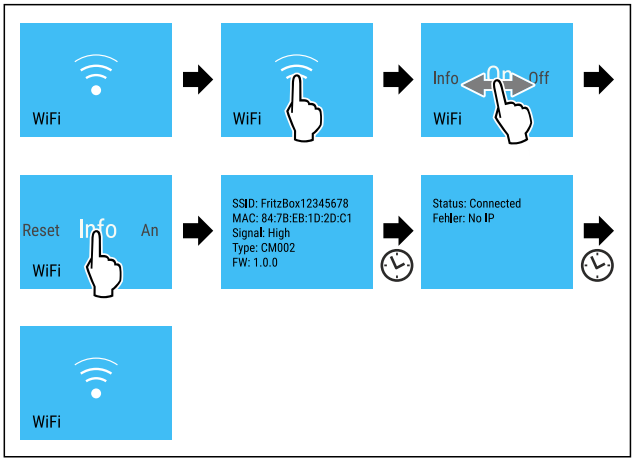

Fig. 24

▶ Carry out action steps according to the illustration.

5 °C Temperature

Use this function to set the temperature.

The temperature depends on the following factors:

- Frequency of door opening
- Duration of door opening
- Room temperature of the installation site
- Type, temperature and quantity of food

Temperature zone	Factory-set temperature	Recommended setting
5 ℃ Fridge section	5 °C	4 °C
-18 ℃ Freezer section	-18 °C	-18 °C
0 ℃ BioFresh*  Fruit & Vegetable-safe*  Meat & Dairy-safe*	0 °C	B-Value (see BioFresh B-Value)
-2 | 0 ℃ Fish & Seafood-safe*	-2 °C | 0 °C*	(see 5.3.3 Fish & S eafood safe *) *

Setting the temperature in the fridge section

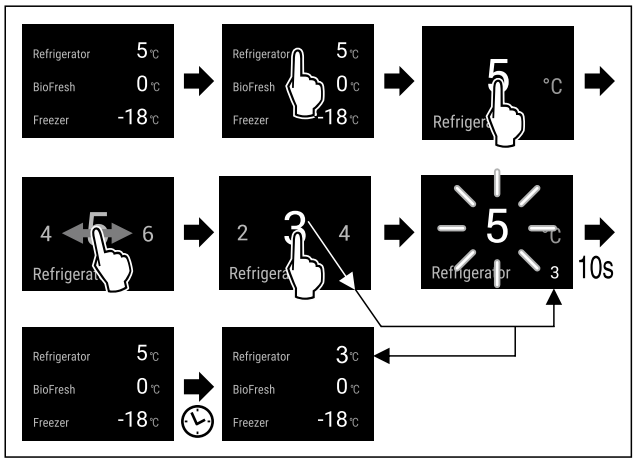

Fig. 25 Example illustration

▶ Carry out action steps according to the illustration.
▷ Temperature is set.

Setting the temperature in the freezer section

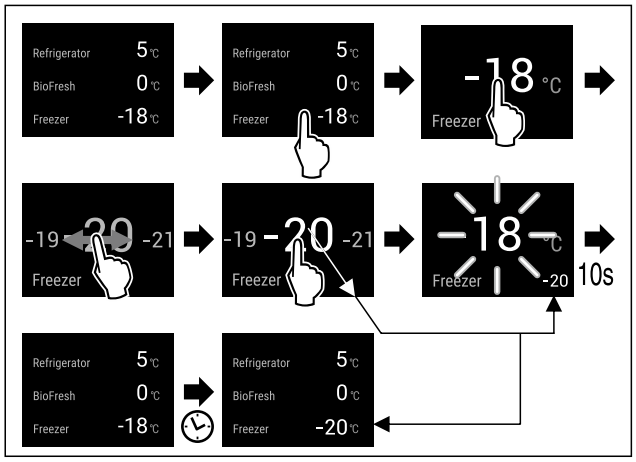

Fig. 26

▶ Carry out action steps according to the illustration.
▷ Temperature is set.

Setting the temperature in BioFresh

Set the temperature using the **BioFresh B-Value**. (see BioFresh B-Value)

Setting the temperature in the Fish & Seafood safe*

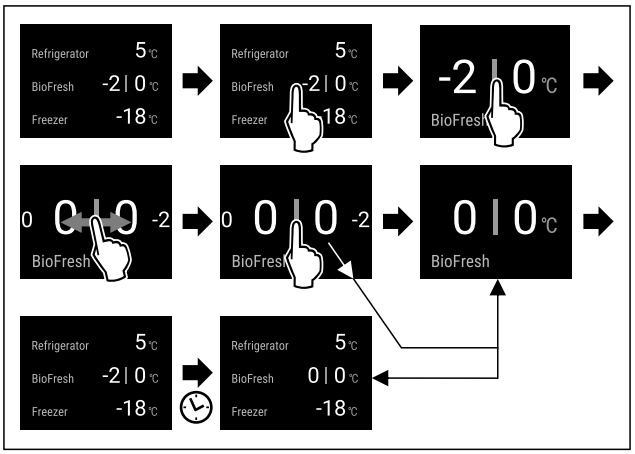

Fig. 27 Example illustration

▶ Carry out action steps according to the illustration.
▷ Temperature is set.

°C/°F Temperature unit

Use this function to set the temperature unit. You can set degrees Celsius or degrees Fahrenheit as the temperature unit.

Setting the temperature unit



Fig. 28

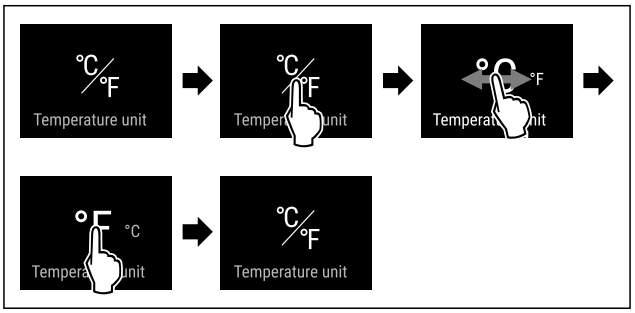

Fig. 29 Example illustration: Switch from degrees Celsius to degrees Fahrenheit.

▶ Carry out action steps according to the illustration.
▷ The temperature unit is set.

B5 BioFresh B-Value

Use this function to set the BioFresh B-Value. With the BioFresh B-Value, you can set BioFresh slightly warmer or colder if necessary due to higher or lower ambient temperatures. The BioFresh B-Value is pre-set to value B5 as delivered. If you change the B-Value, refer to the following table:

Value	Description
B1	Lowest temperature
B1-B4	The temperature can drop below 0 °C which means foods can easily freeze.
B5	Pre-set temperature
B9	Highest temperature

Setting the BioFresh B-Value



Fig. 30

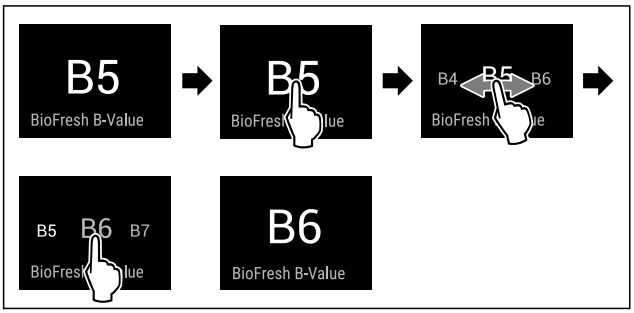

Fig. 31 Example illustration: Switch from B5 to B6.

▶ Carry out action steps according to the illustration.
▷ The BioFresh B-Value is set.
▷ Status display shows target temperature.*

D1 D-Value

The D-Value is pre-set for your appliance and is not permitted to be changed.

SuperCool*

You can use this function to activate or deactivate SuperCool. If SuperCool is activated, then the appliance increases the cooling capacity. It allows you to achieve lower cooling temperatures. You can activate SuperCool when you would like to cool a large quantity of food quickly.

If the function is active, the appliance operates at higher power. As a result, the appliance's operating noise may be temporarily louder and energy consumption will increase.

Activating SuperCool

Time for activation of the function:

- When you would like to store fresh food in the fridge section: Activate the function when inserting food.

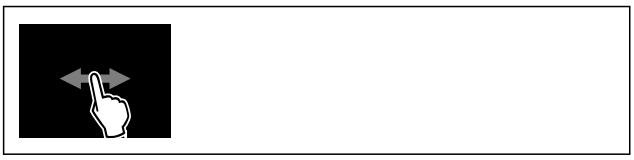

Fig. 32

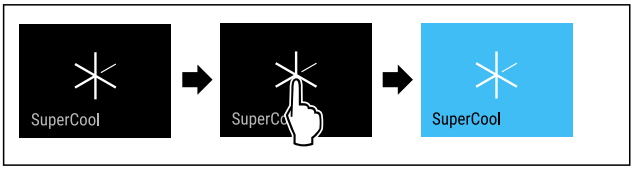

Fig. 33

▶ Carry out action steps according to the illustration.

-or-

▶ Activate with the SmartDevice app.

▷ SuperCool is activated.
▷ The temperature display turns blue.

Deactivating SuperCool

SuperCool is deactivated automatically after 18 hours. However, you can also deactivate SuperCool manually at any time:

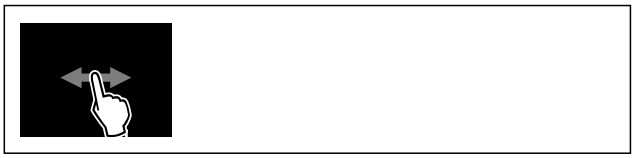

Fig. 34

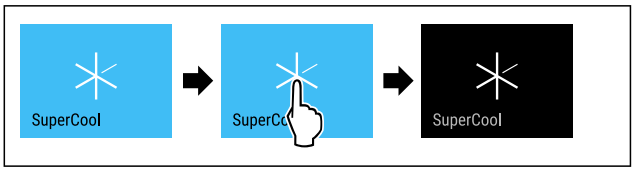

Fig. 35

▶ Carry out action steps according to the illustration.

-or-

▶ Deactivate with the SmartDevice app.

▷ SuperCool is deactivated.
▷ The appliance continues to run in normal mode.
▷ The appliance cools to the temperature set previously.

VarioTemp*

This function allows you to use the freezer compartment as an additional cooling zone. You can set the temperature from -2 °C to 14 °C. If you activate this function, it may cause more noise. However, the appliance is still fully functional.

For storage of foodstuff in the freezer compartment with the VarioTemp function activated, Liebherr recommends:

Temperature range	Foodstuff
4 °C to 9 °C	Cooked foods, cheese, preserves
0 °C	Packaged fruit and vegetables
-2 °C	Fresh fish and seafood
10 °C to 14 °C	Cold-sensitive foodstuffs such as sweet potatoes, pumpkin or exotic fruits, food or drinks that should not be eaten too cold

Activating VarioTemp

Ensure that the following requirements are met:

❑ The IceMaker has been cleaned. (see 9.8.7 Cleaning the EasyTwist-Ice*) *
❑ The EasyTwist-Ice has been cleaned. (see 9.8.7 Cleaning the EasyTwist-Ice*) *

WARNING

Risk of food poisoning!

▶ Do not re-freeze thawed food.
▶ Use defrosted foodstuff as soon as possible.

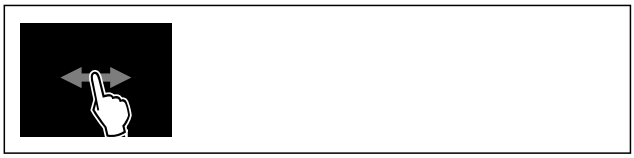

Fig. 36

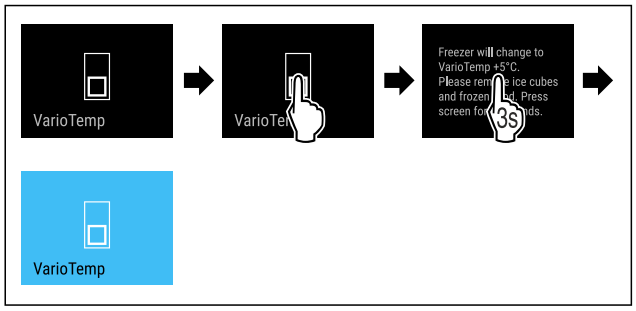

Fig. 37

▶ Carry out steps according to the illustration.
▷ VarioTemp is activated.
▷ IceMaker is deactivated.*
▷ VarioTemp is set to the preselected value.
▷ The status display does not show the preset temperature until it is reached.

Adjusting VarioTemp

Ensure that the following requirements are met:

❑ The VarioTemp is activated. (see Activating VarioTemp)

WARNING
Risk of food poisoning!
▶ Do not re-freeze thawed food.
▶ Use defrosted foodstuff as soon as possible.

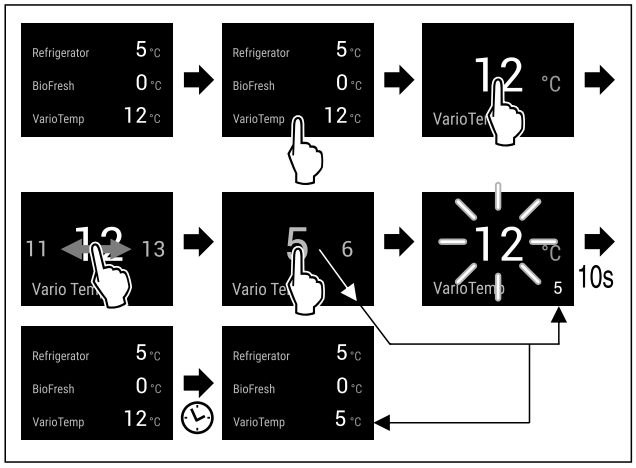

*Fig. 38 Example illustration: Change VarioTemp from 12 °C to 5 °C for a fridge-freezer combination with BioFresh.**

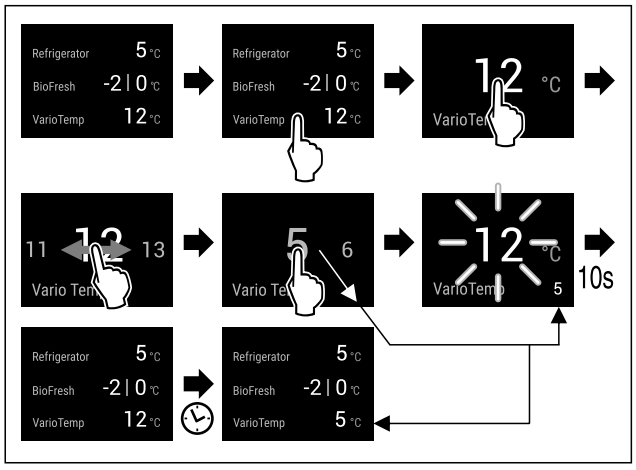

*Fig. 39 Example illustration: Change VarioTemp from 12 °C to 5 °C for a fridge-freezer combination with Fish & Seafood safe.**

▶ Carry out steps according to the illustration.
▷ VarioTemp is adjusted.
▷ The status display does not show the new set temperature until it is reached.

Deactivating VarioTemp

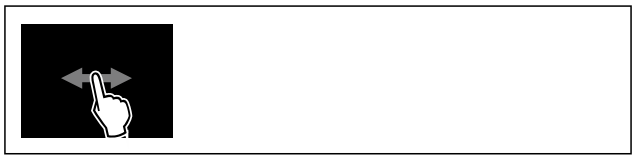

Fig. 40

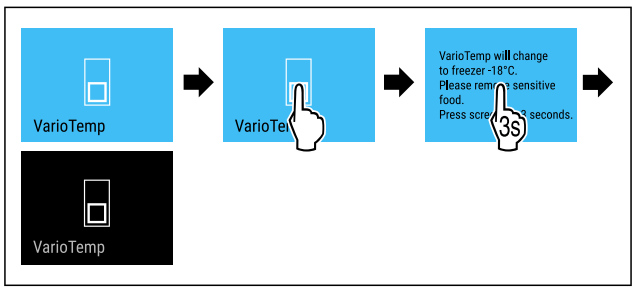

Fig. 41

▶ Carry out steps according to the illustration.
▷ VarioTemp is deactivated.
▷ The freezer compartment is cooled to the preset temperature.

SuperFrost

You can use this function to activate or deactivate SuperFrost. If SuperFrost is activated, then the appliance increases the freezing capacity. It allows you to achieve lower freezing temperatures.

Application:

- Quickly freeze fresh food through to the core. This ensures that the nutrition, appearance and taste of frozen food is maintained.
- Increase the cold reserve in stored frozen food before defrosting the appliance.

If the function is active, the appliance operates at higher power. As a result, the appliance's operating noise may be temporarily louder and energy consumption will increase.

Activating SuperFrost

Make sure that the following requirements are fulfilled:

❑ Freezing quantity and time for activation of SuperFrost are taken into account. (see Freezing food using SuperFrost)
❑ VarioTemp is deactivated. (see VarioTemp*) *



Fig. 42

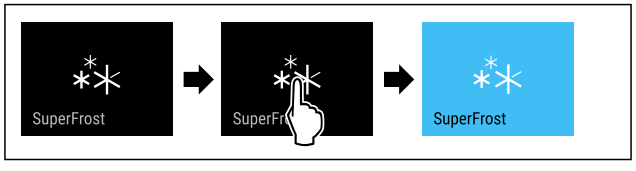

Fig. 43

▶ Carry out action steps according to the illustration.
-or-
▶ Activate with the SmartDevice app.

▷ SuperFrost is activated.
▷ The temperature display turns blue.

Deactivating SuperFrost

SuperFrost is automatically deactivated after 56 to 72 hours depending on the quantity of the food inserted. However, you can also deactivate SuperFrost manually at any time:

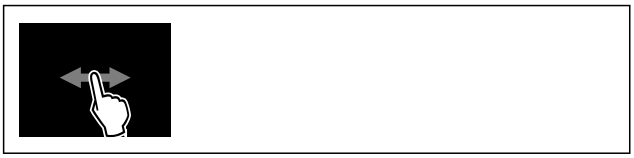

Fig. 44

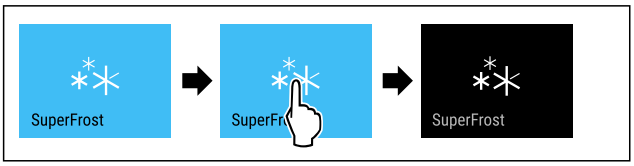

Fig. 45

▶ Carry out action steps according to the illustration.

-or-

▶ Deactivate with the SmartDevice app.

▷ SuperFrost is deactivated.
▷ The appliance continues to run in normal mode.
▷ The appliance cools to the temperature set previously.

Start defrosting cycle

Use this function to start the automatic defrosting cycle manually if it does not start automatically in the event of a fault.

Starting defrosting cycle



Fig. 46

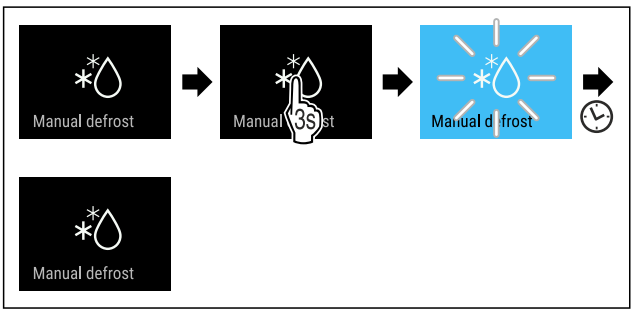

Fig. 47

▶ Carry out action steps according to the illustration.
▷ Defrosting cycle has started: Icon flashes until defrosting cycle is automatically completed.
▷ When defrosting cycle is finished: The device continues to run in normal mode.

Cancelling defrosting cycle

The defrosting cycle will be stopped automatically. However, you can also cancel the defrosting cycle at any time during the defrosting process:

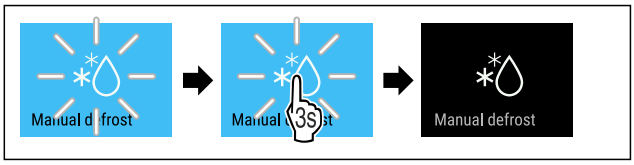

Fig. 48

▶ Carry out action steps according to the illustration.
▷ Defrosting cycle is cancelled.
▷ The device continues to run in normal mode.

PartyMode

You can use this function to activate or deactivate Party-Mode. PartyMode activates various functions that are useful for a party.

PartyMode activates the following functions:

- SuperCool (see SuperCool*) *
- SuperFrost (see SuperFrost)
- IceMaker with MaxIce (see IceMaker / MaxIce *) *

You can adjust all listed functions individually and flexibly. When you deactivate PartyMode, all changes are discarded.

If the function is active, the device operates at higher power. As a result, the device's operating noise may be temporarily louder and energy consumption will increase.

Activating PartyMode

Make sure that the following requirements are fulfilled:

❑ The IceMaker has been started. (see 4.3 Starting the IceMaker for the first time*) *



Fig. 49

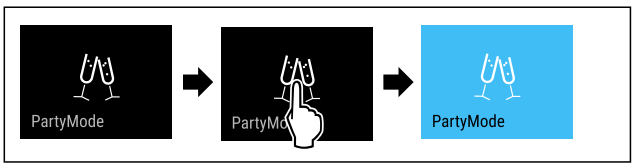

Fig. 50

▶ Carry out action steps according to the illustration.
▷ PartyMode and the associated functions are activated.
▷ The temperature display turns blue.
▷ The current temperature flashes until the target temperature is reached.

Deactivating PartyMode

The PartyMode is automatically deactivated after 24 seconds. However, you can also deactivate PartyMode manually at any time:



Fig. 51

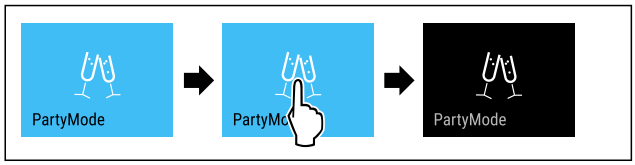

Fig. 52

▶ Carry out action steps according to the illustration.
▷ PartyMode is deactivated.
▷ The appliance cools to the temperature set previously: The current temperature flashes until the target temperature is reached.

HolidayMode*

You can use this function to activate or deactivate HolidayMode. If you activate HolidayMode, the fridge section is set to 15 °C. This saves you energy during longer periods of absence and prevents bad odours and growth of mould.

Appliance status when HolidayMode is active
Fridge section cools to 15 °C.
BioFresh cools to 15 °C.
The set temperature is maintained in the freezer section.
PartyMode is deactivated.
SuperCool is deactivated.*

Activating HolidayMode

▶ Empty the fridge section completely.
▶ Empty BioFresh completely.

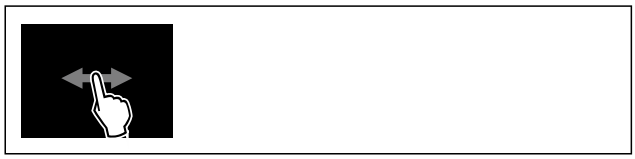

Fig. 53

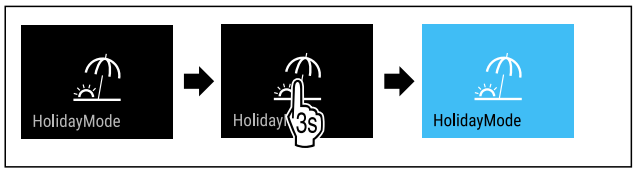

Fig. 54

▶ Carry out action steps according to the illustration.
▷ HolidayMode is activated.
▷ Temperature display turns blue and shows HolidayMode symbol.

Deactivating HolidayMode

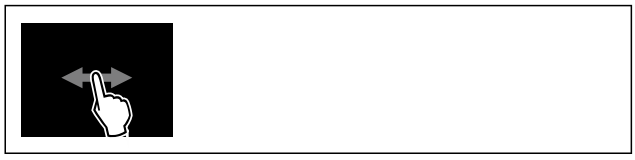

Fig. 55

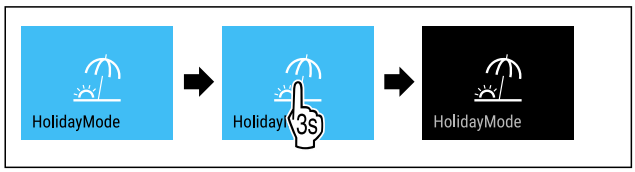

Fig. 56

▶ Carry out action steps according to the illustration.
▷ HolidayMode is deactivated.
▷ The appliance cools to the temperature set previously.

SabbathMode

You can use this function to activate or deactivate SabbathMode. If you activate this function, some electronic functions are switched off. As a result, your device meets the religious requirements for Jewish holidays such as Sabbath and complies with STAR-K Kosher certification.

Device status when SabbathMode is active
The status display shows SabbathMode permanently.
All functions on the display are locked except for the **Deactivate SabbathMode function**.
Active functions remain active.
The display remains bright when you close the door.
The interior lighting is deactivated.
Reminders are not implemented. The set time interval stops.
Reminders and warnings are not displayed.
There is no door alarm.
There is no temperature alarm.
The IceMaker is switched off.*
The InfinitySpring is switched off.*
The defrosting cycle operates only for the specified time, without considering the appliance consumption.
After a power failure, the appliance returns to SabbathMode.

Device status

Note
This appliance has certification from the “Institute for Science and Halacha”. (www.machonhalacha.co.il)

You can find a list of STAR-K-certified appliances at www.star-k.org/appliances.

Activating SabbathMode

WARNING
Danger of food poisoning from spoiled food!
If you have SabbathMode activated and a power failure occurs, no message appears in the status display about the power failure. Once the power is restored, the appliance continues to operate in SabbathMode. The power failure may mean that food spoils and the consumption of this food could lead to food poisoning.
After a power failure:
▶ Do not consume food that was frozen and has thawed out.



Fig. 57

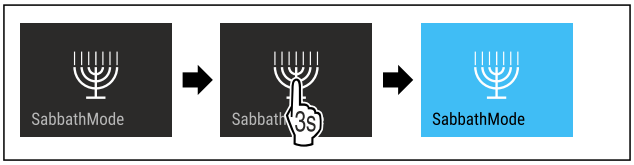

* Depending on model and options

Fig. 58

▶ Carry out action steps according to the illustration.
▷ SabbathMode is activated.
▷ The status display shows SabbathMode permanently.

Deactivating SabbathMode

The SabbathMode is automatically deactivated after 80 hours. However, you can also deactivate SabbathMode manually at any time:

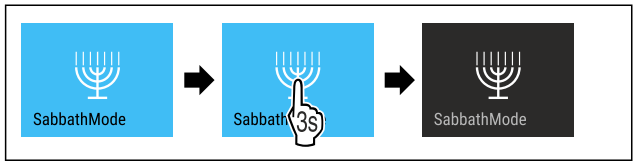

Fig. 59

▶ Carry out action steps according to the illustration.
▷ SabbathMode is deactivated.

EnergySaver

You can use this function to activate or deactivate Energy saving mode. If energy saving mode is activated, the energy consumption decreases and the temperature in the device increases. The food remains fresh, but the shelf life is shortened.

Temperature zone	Recommended setting (see Setting the temperature in the fridge section)	Temperature with active EnergySaver
5 °C Fridge section	4 °C	7 °C
-18 °C Freezer section	-18 °C	-16 °C

Temperatures

Activating EnergySaver



Fig. 60

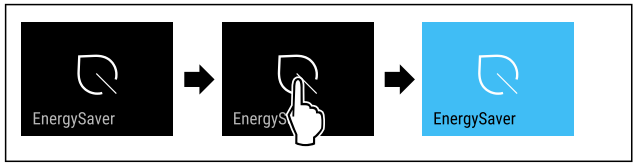

Fig. 61

▶ Carry out action steps according to the illustration.
▷ Energy saving mode is activated.

Deactivating EnergySaver

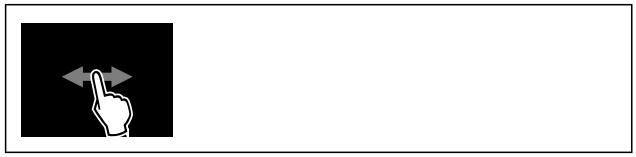

Fig. 62

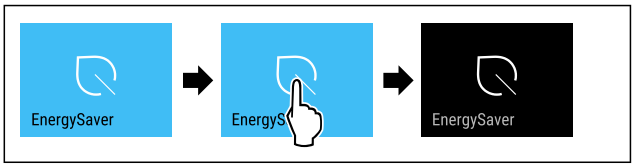

Fig. 63

▶ Carry out action steps according to the illustration.
▷ Energy saving mode is deactivated.

HydroBreeze*

You can use this function to activate or deactivate HydroBreeze. If you activate the function, HydroBreeze generates a fine, cool mist in BioFresh-safe. This extends the shelf life of unpackaged salad, vegetables and fruit with high intrinsic moisture.

If you activate the function, HydroBreeze activates every 90 minutes for 4 seconds when the door is closed. When you open the door, HydroBreeze activates according to the setting:

Value	Description
1	HydroBreeze is active for 4 seconds when the door is open.
2	HydroBreeze is active for 6 seconds when the door is open.
3	HydroBreeze is active for 8 seconds when the door is open.
Deactivated (pre-setting)	HydroBreeze is deactivated.

HydroBreeze duration when the door is open

Activating HydroBreeze

Note

If you activate HydroBreeze but there is no food in the drawer, condensate forms on the base of the drawer.

▶ Only activate HydroBreeze if you are storing food in the drawer.

Make sure that the following requirements are fulfilled:

❑ The HydroBreeze is clean. (see 9.8.6 Cleaning the HydroBreeze*)
❑ The water tank is full. (see 8.9.1 Fill the water tank)

Activate HydroBreeze by selecting a value for the HydroBreeze duration:

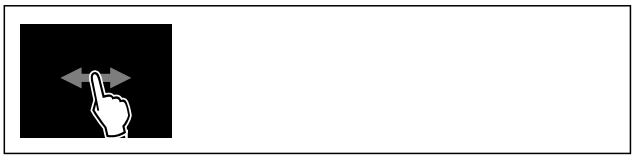

Fig. 64

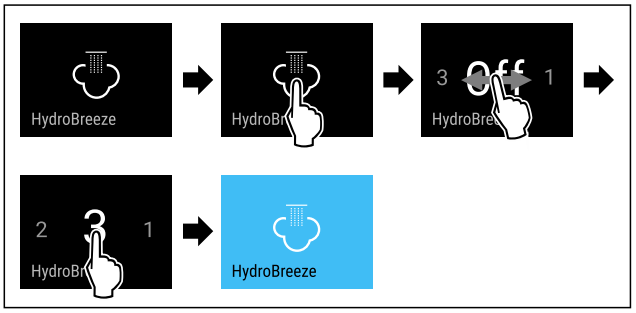

Fig. 65 Example illustration: Activate HydroBreeze with value 3.

▶ Carry out action steps according to the illustration.
▷ HydroBreeze is activated.

Deactivating HydroBreeze



Fig. 66

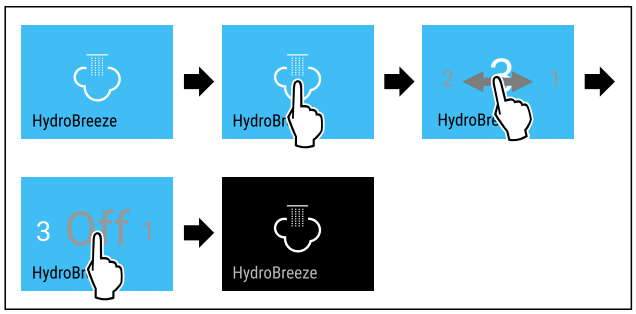

Fig. 67

▶ Carry out action steps according to the illustration.
▷ HydroBreeze is deactivated.

IceMaker / MaxIce *

Use the IceMaker function to activate or deactivate the production of ice cubes. Use the MaxIce function to increase the amount of ice cubes produced by the IceMaker. MaxIce is automatically deactivated after 48 hours. However, you can also deactivate MaxIce manually at any time: (see Deactivating MaxIce)

More information on the number of ice cubes:	(see 10.1 Technical specifications)
Further information on the IceMaker water supply:	(see IceMaker water supply*)
More information on cleaning the lines of the IceMaker:	(see TubeClean *)

If the function is active, the device operates at higher power. As a result, the device's operating noise may be temporarily louder and energy consumption will increase.

Activating the VarioTemp function will result in the automated deactivation of the IceMaker. (see VarioTemp*) *

Activating IceMaker

Make sure that the following requirements are fulfilled:

❑ The water supply is established at the fixed water connection. See installation instructions.*
❑ IceMaker is put into operation. (see 8.12 IceMaker*)



Fig. 68

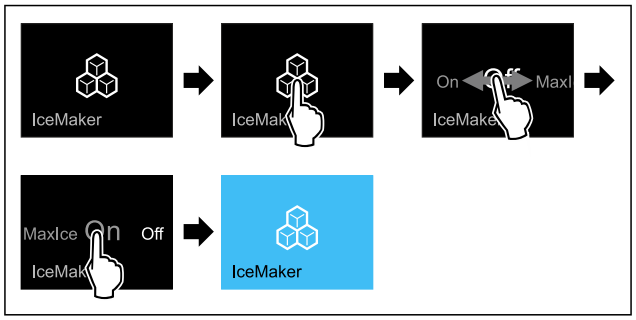

Fig. 69

▶ Carry out action steps according to the illustration.
-or-
▶ Activate with the SmartDevice app.

▷ IceMaker is activated. It can take up to 24 hours for the IceMaker to produce the first ice cubes.

Activating the IceMaker with MaxIce

If you have not activated the IceMaker function before, make sure that the following requirements are met:

❑ The water supply is established at the fixed water connection. See installation instructions.*
❑ IceMaker is put into operation. (see 8.12 IceMaker*)

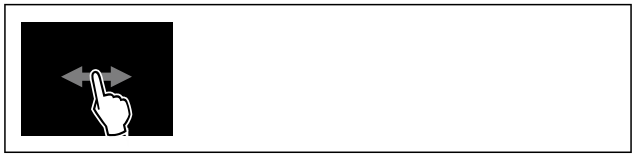

Fig. 70

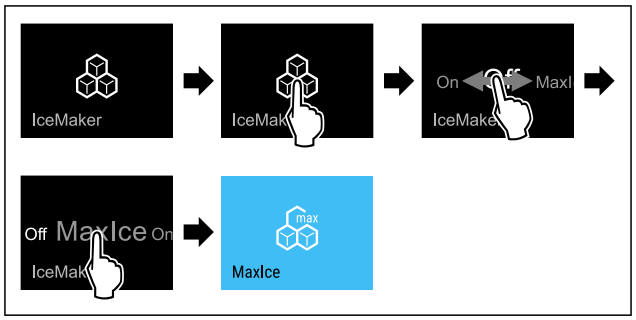

Fig. 71

▶ Carry out action steps according to the illustration.
-or-
▶ Activate with the SmartDevice app.

▷ The IceMaker is activated with MaxIce.

Changing between the IceMaker and MaxIce

If you have activated the IceMaker and would like to change to MaxIce:



Fig. 72

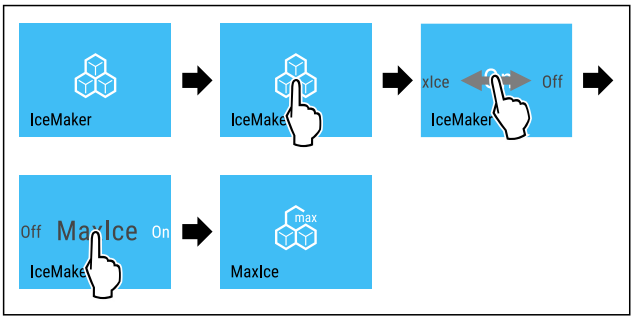

Fig. 73

▶ Carry out action steps according to the illustration.
▷ The IceMaker is activated with MaxIce.

If you have activated MaxIce and would like to change to the IceMaker:



Fig. 74

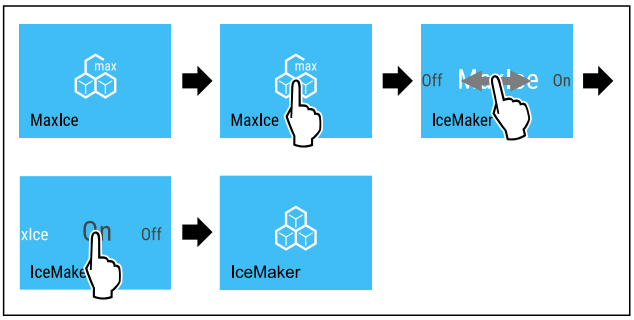

Fig. 75

▶ Carry out action steps according to the illustration.
▷ IceMaker is activated.
▷ MaxIce is deactivated.

Deactivating the IceMaker and MaxIce



Fig. 76

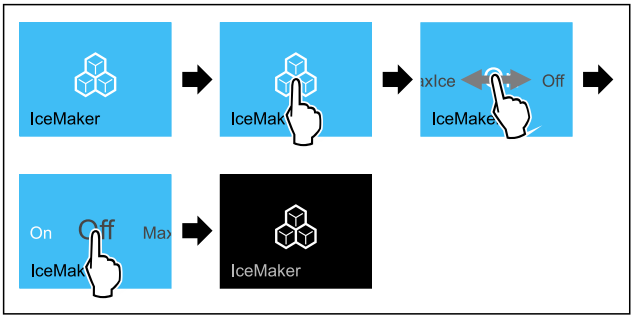

Fig. 77 Example illustration of the active IceMaker function

▶ Carry out action steps according to the illustration.

-or-

▶ Deactivate with the SmartDevice app.

▷ IceMaker and MaxIce are deactivated.
▷ If ice cubes are currently being made, the system completes the process.
▷ The IceMaker goes off automatically.

Deactivating MaxIce

▶ Activate the IceMaker. (see Activating IceMaker)
▷ MaxIce is deactivated.
▷ IceMaker is activated.
▷ To deactivate the IceMaker and MaxIce: (see Deactivating the IceMaker and MaxIce)

IceMaker water supply*

Use this function to set the water supply. The water supply regulates the amount of water supplied. The water supply can be changed if it does not match the water pressure and the ice cube size dispensed.

The water supply is pre-set to value 4 as delivered. A value from 1 (smallest inflow volume) to 8 (largest inflow volume) can be selected.

Setting water supply

Make sure that the following requirements are fulfilled:

❑ The IceMaker has been started. (see 4.3 Starting the IceMaker for the first time*) *
❑ IceMaker is activated. (see IceMaker / MaxIce *) *



Fig. 78

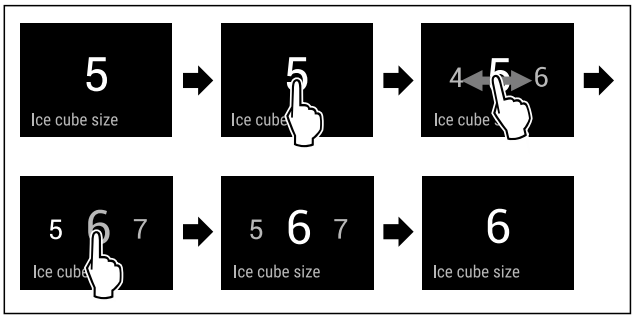

Fig. 79 Example illustration: Switch from value 5 to value 6.

▶ Carry out action steps according to the illustration.
▷ The water supply is set.

TubeClean *

You can use this function to activate or deactivate Tube-Clean. If TubeClean is activated, it cleans the IceMaker lines.

Activating TubeClean

Make sure that the following requirements are fulfilled:

❑ IceMaker cleaning is prepared. (see 9.8.8 Cleaning the IceMaker*)
❑ Empty container with a capacity of 1.5 l and with a maximum height of 10 cm is ready.

▶ Place the container in the drawer under the IceMaker.



Fig. 80

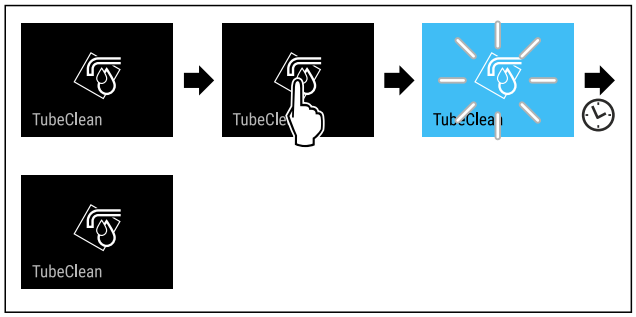

Fig. 81

▶ Carry out action steps according to the illustration.
▷ TubeClean is activated.
▷ The cleaning process has started: Icon flashes until the cleaning process is automatically completed after 60 minutes.
▷ When the cleaning process is complete: The device continues to run in normal mode.

Deactivating TubeClean

TubeClean is automatically ended after 60 minutes. However, TubeClean can also be deactivated at any time during the cleaning process:

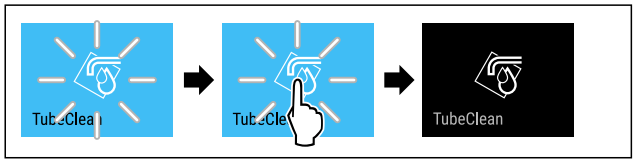

Fig. 82

▶ Carry out action steps according to the illustration.
▷ TubeClean is deactivated: Cleaning process is aborted.
▷ The device continues to run in normal mode.

CleaningMode

You can use this function to activate or deactivate CleaningMode. CleaningMode enables the appliance to be cleaned conveniently.

This setting applies to the fridge section.

Application:

- Clean the fridge section. (see 9.8 Cleaning the appliance)
- Clean the InfinitySpring. (see 9.8.5 Cleaning the InfinitySpring *) *

Device status when CleaningMode is active
The status display shows CleaningMode permanently.
The fridge section is switched off.
Interior lighting is activated.
The reminders and warnings are not displayed. No signal tone sounds.
The InfinitySpring is switched off.*

Device status

Activating CleaningMode



Fig. 83

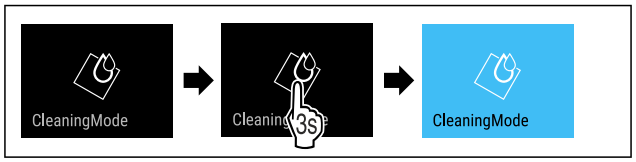

Fig. 84

▶ Carry out action steps according to the illustration.
▷ CleaningMode is activated.
▷ The status display shows CleaningMode permanently.

Deactivating CleaningMode

CleaningMode is deactivated automatically after 60 minutes. However, you can also deactivate CleaningMode manually at any time:

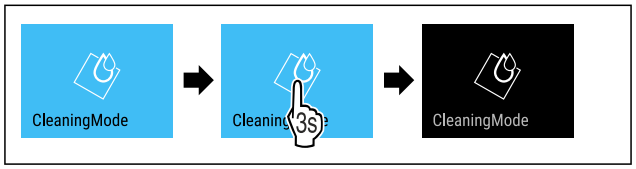

Fig. 85

▶ Carry out action steps according to the illustration.
▷ CleaningMode is deactivated.
▷ The appliance cools to the temperature set previously.

Display brightness

Use this function to set the display brightness in stages.

You can select the following brightness levels:

- 40 %
- 60 %
- 80 %
- 100 % (pre-setting)

Setting the brightness



Fig. 86

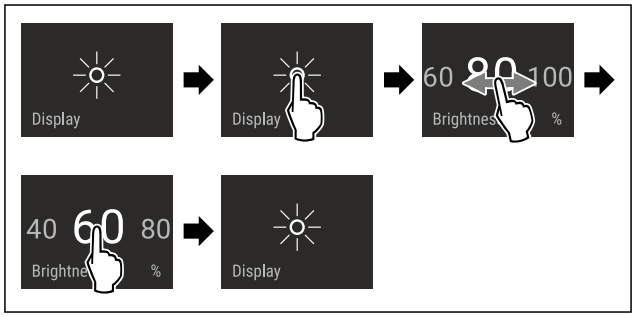

Fig. 87 Example illustration: Switch from 80 % to 60 %.

▶ Carry out action steps according to the illustration.
▷ The brightness is set.

Door alarm

Use this function to activate or deactivate the door alarm. The door alarm sounds if the door is open for too long. The door alarm is activated on delivery. You can set how long the door may be open before the door alarm sounds.

The following values can be set:

- 1 minute
- 2 minutes

*** Depending on model and options**

- 3 minutes
- Off

Setting the door alarm



Fig. 88

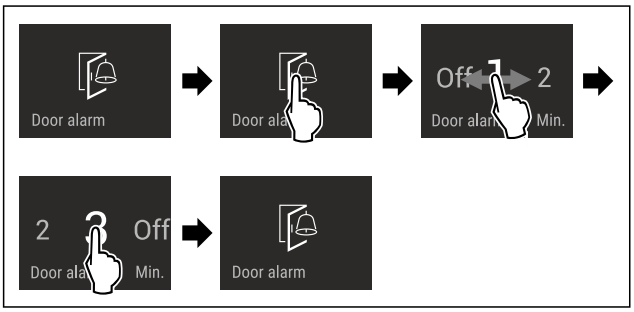

Fig. 89 Example illustration: Change door alarm from 1 minute to 3 minutes.

▶ Carry out action steps according to the illustration.
▷ The door alarm is set.

Deactivating the door alarm



Fig. 91

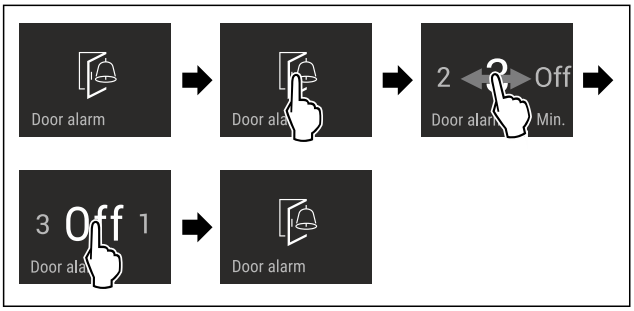

Fig. 92

▶ Carry out action steps according to the illustration.
▷ The door alarm is deactivated.

Input lock

You can use this function to activate or deactivate the input lock. The input lock prevents the appliance being operated accidentally, e.g. by children.

Application:

- Avoid unintentional modification of functions.
- Avoid unintentional switching off of the device.
- Avoid unintentional temperature setting.

Activating the input lock

If you activate the input lock, you can continue to navigate in the menus but you cannot select or change other functions.



Fig. 93

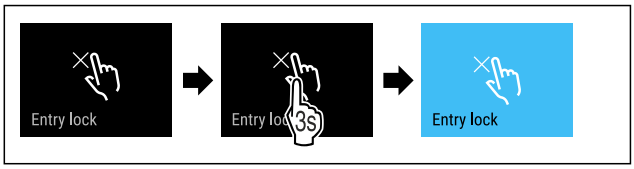

Fig. 94

▶ Carry out action steps according to the illustration.
▷ Input lock is activated.

Deactivating the input lock



Fig. 95

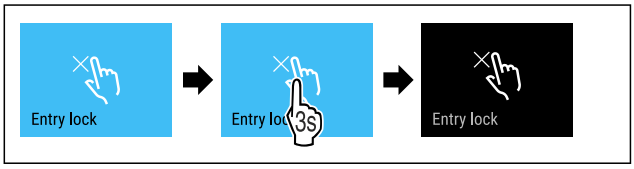

Fig. 96

▶ Carry out action steps according to the illustration.
▷ Input lock is deactivated.

Language

Use this function to set the display language.

You can select the following languages:

- Deutsch
- English
- Français
- Español
- Italiano
- Nederlands
- Čeština
- Polski
- Português
- Bulgarian
- Русский
- 温度单位

Setting the language



Fig. 97

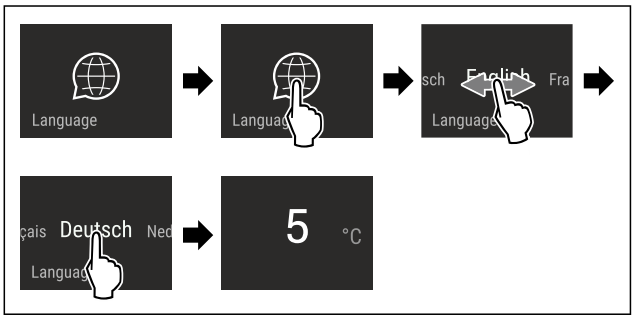

Fig. 98 Example illustration depending on the language and temperature

▶ Carry out action steps according to the illustration.
▷ The language is set.

▷ The display returns to the status display.

Device information

Use this function to indicate the model name, index, serial number and service number of your device. You will need the device information when you contact customer service. (see 10.4 Customer Service)

This function also opens the Advanced menu. (see 3 Functionality of the Touch & Swipe display)

Indicating the device information



Fig. 99



Fig. 100

▶ Carry out action steps according to the illustration.
▷ Display indicates device information.

Software

Use this function to indicate the software version of your device.

Indicating the software version



Fig. 101

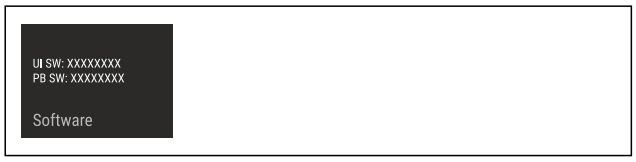

Fig. 102

▶ Carry out action steps according to the illustration.
▷ Display indicates software version.

Reminder

Use this function to activate or deactivate the reminders. The function is activated on delivery.

If the function is activated, the following reminders will appear:

- Replace the water filter (see Replace the water filter*) *
- Replace the FreshAir activated carbon filter (see Replace the FreshAir activated carbon filter)

Activating the reminder



Fig. 103

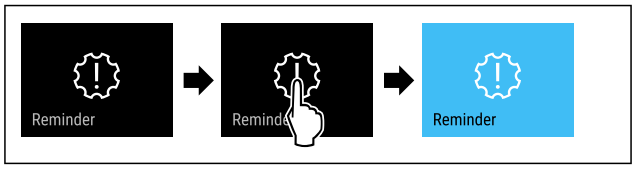

Fig. 104

▶ Carry out action steps according to the illustration.
▷ Reminder is activated.

Deactivating the reminder



Fig. 105

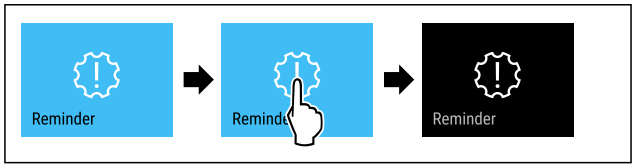

Fig. 106

▶ Carry out action steps according to the illustration.
▷ Reminder is deactivated.

Demo mode

Demo mode is a special feature for dealers who want to demonstrate appliance features. If you activate demo mode, all refrigeration functions are deactivated.

If you switch on your appliance and “Demo” appears in the status display, then demo mode is already activated.

If you activate and then deactivate demo mode, the appliance will be reset to factory defaults. (see Resetting to factory settings)

Activating demo mode



Fig. 107

* Depending on model and options

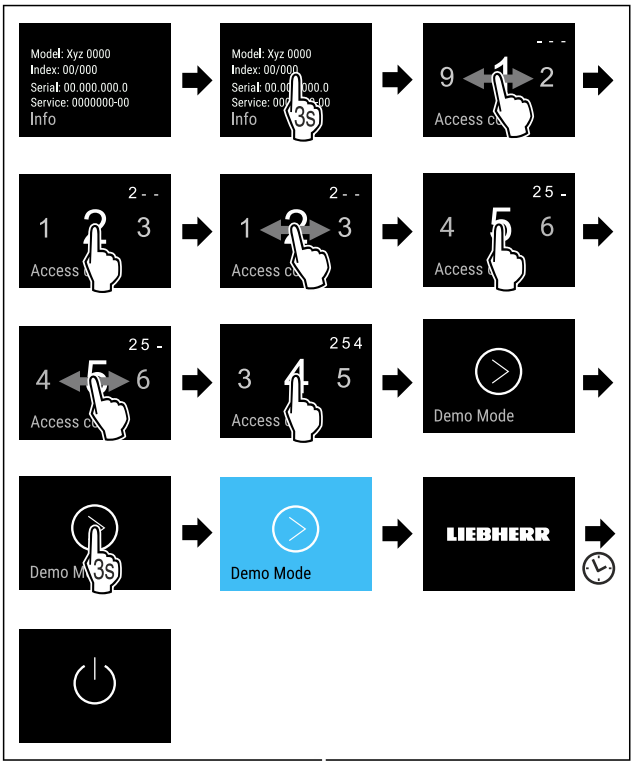

Fig. 108

▶ Carry out action steps according to the illustration.
▷ Demo mode is activated.
▷ Appliance is switched off.
▶ Switch on the appliance. (see 4.1 Switching on appliance (first use))
▷ “DEMO” appears in the status display.

Deactivating demo mode



Fig. 109

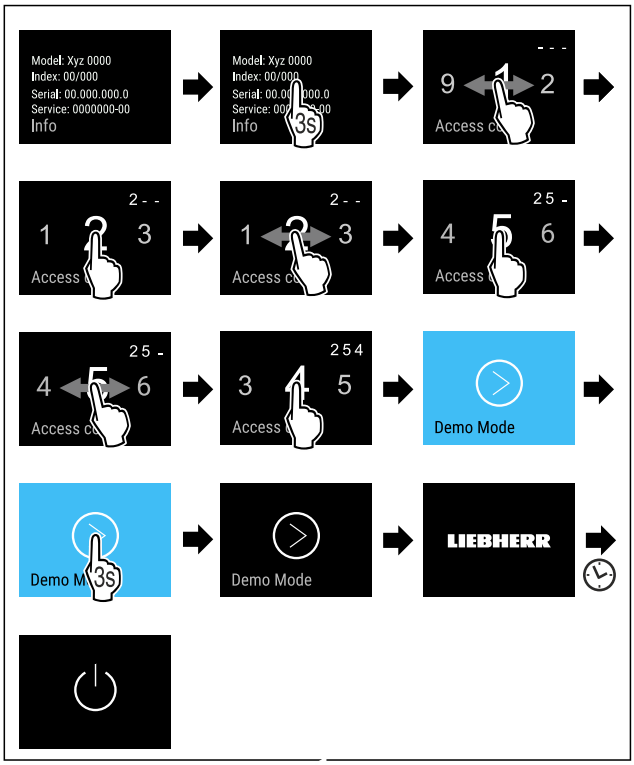

Fig. 110

▶ Carry out action steps according to the illustration.
▷ Demo mode is deactivated.
▷ Appliance is switched off.
▶ Switch on the appliance. (see 4.1 Switching on appliance (first use))
▷ Appliance is reset to factory settings.

Resetting to factory settings

Use this function to reset all settings to factory defaults. All settings you have made so far are reset to their original settings.

Performing a reset



Fig. 111

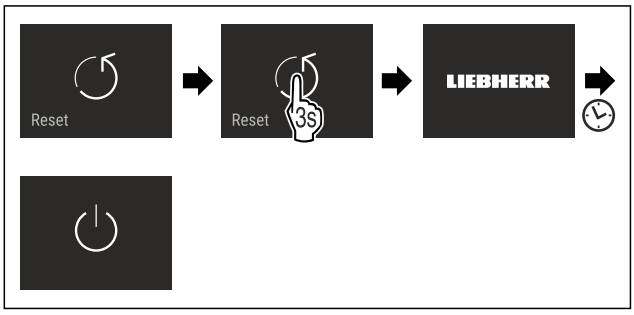

Fig. 112

▶ Carry out action steps according to the illustration.
▷ Device is reset.
▷ Device is switched off.
▶ Restart the device. (see 4.1 Switching on appliance (first use))

7.3 Messages

There are two categories of messages:

Category	Importance
Warning	Warnings appear in the event of a door alarm or malfunction. Simple warnings can be cancelled by yourself. In the event of serious malfunctions, you must contact customer service. (see 10.4 Customer Service)
Reminder	Reminders remind you of general processes. You can carry out these operations to end the message.

7.3.1 Overview of warnings

Behaviour of the appliance in the event of warnings:
- Warning appears in red on the display.
- The alarm tone sounds at an ever-increasing volume.
- The interior lighting pulsates for some warnings.

Message	Cause	Exit the message
 **Door alarm**	The message appears if the door is open for too long.	Carry out action steps (see Door alarm) .
 **Power outage alarm**	The message appears if the freezing temperature has risen due to a power failure.	Carry out action steps (see Power outage alarm) .
 **Temperature alarm**	The message appears if the freezing temperature does not correspond to the set temperature.	Carry out action steps (see Temperature alarm) .
 **Error**	The message appears if there is an appliance error. A component of the appliance has a fault.	Carry out action steps (see Error) .
 **WLAN error**	The message appears if the appliance could not be connected to the WLAN. (see Establishing the WiFi connection for the first time)	Carry out action steps (see WLAN error) .

7.3.2 Ending warnings

Door alarm

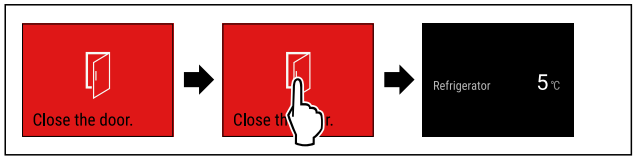

Fig. 113 Example illustration

▶ Carry out action steps according to the illustration.
-or-
▶ Close the door.

▷ The display returns to the status indicator.

You can set how long the door may be open before the door alarm sounds. (see Setting the door alarm)

Power outage alarm

When the power failure has ended, the appliance cools down to the previously set target temperature.

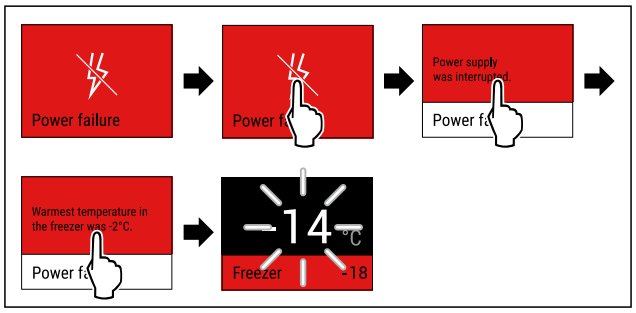

Fig. 114 Example illustration

▶ Briefly touch the display.
▷ Display shows information about the warning.
▶ Briefly touch the display.
▷ Warmest freezing temperature is displayed.
▷ If the freezing temperature was below -9 °C: Food can still be consumed.
If the freezing temperature has risen above -9 °C:
▶ Check the food.
▶ Briefly touch the display.
▷ The display returns to the status indicator: Current temperature and target temperature are displayed.

Temperature alarm

Temperature differences can be caused by:
- You have put in warm, fresh food.
- Too much warm air has got in while you were sorting out the freezer or removing items.
- There has been a longer power failure.
- The appliance is faulty.

▶ Eliminate causes.
▷ The appliance cools to the target temperature set previously.

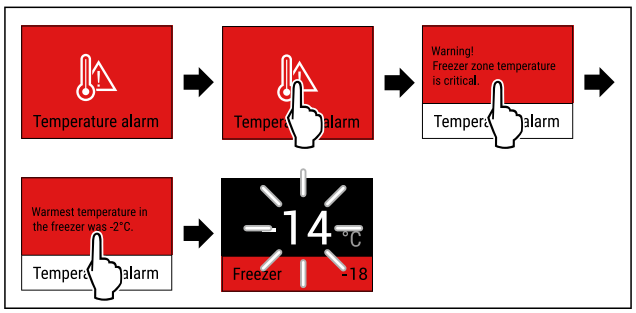

Fig. 115 Example illustration

▶ Briefly touch the display.
▷ Display shows information about the warning.
▶ Briefly touch the display.
▷ Warmest freezing temperature is displayed.
▷ If the freezing temperature was below -9 °C: Food can still be consumed.
If the freezing temperature has risen above -9 °C:
▶ Check the food.
▶ Briefly touch the display.
▷ The display returns to the status indicator: Current temperature and target temperature are displayed.

Error

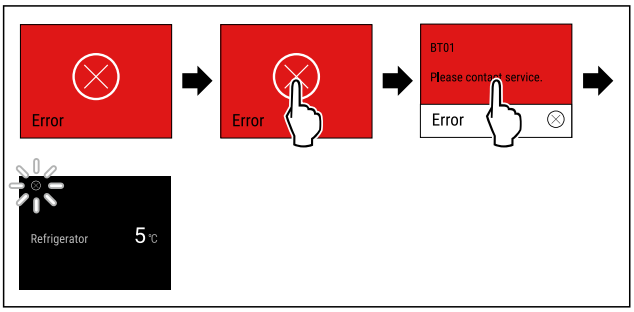

Fig. 116 Example illustration

▶ Briefly touch the display.
▷ Error code is displayed.
▶ Note the error code.
▶ Briefly touch the display.
▷ The display returns to the status indicator.
▶ Contact Customer Service. (see 10.4 Customer Service)

WLAN error

▶ Check WLAN connection.
▶ Reconnect the appliance to the WLAN. (see WiFi)

7.3.3 Overview of reminders

Behaviour of the appliance during reminders:

- Reminder appears yellow on the display.
- Alarm tone sounds.
- The interior lighting pulsates for some reminders.

Message	Cause	Exit the message
 * **Insert the IceMaker drawer***	The message appears if the IceMaker is activated but the IceMaker drawer is open.*	Carry out action steps (see Insert the IceMaker drawer*) .*
 * **Replace the water filter***	The message appears when the water filter needs to be replaced.*	Carry out action steps (see Replace the water filter*) .*
 **Replace the FreshAir activated carbon filter**	The message appears when the activated carbon filter needs to be replaced.	Carry out action steps (see Replace the FreshAir activated carbon filter) .

7.3.4 Ending reminders

Insert the IceMaker drawer*

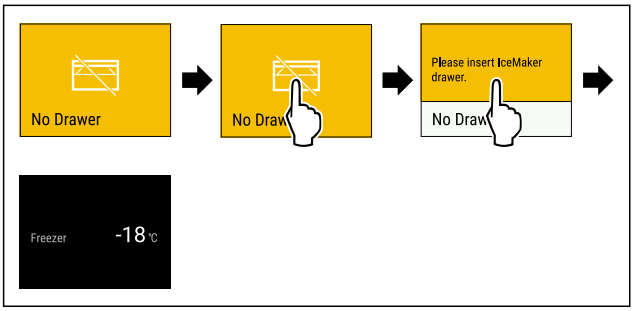

Fig. 117 Example illustration

▶ Briefly touch the display.
▷ Display shows reminder information.
▶ Briefly touch the display.
▶ Insert the IceMaker drawer.

-or-

▶ Deactivate IceMaker. (see IceMaker / MaxIce *)

▷ If IceMaker drawer is inserted and IceMaker is activated: IceMaker produces ice cubes.

Replace the water filter*

Liebherr recommends: Replace the InfinitySpring water filter every 6 months.

Note
Water filters are available from the Liebherr-Hausgeräte store at home.liebherr.com/shop/de/deu/zubehor.html.

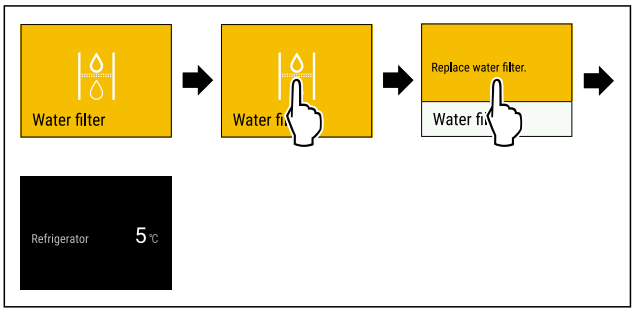

Fig. 118 Example illustration

▶ Briefly touch the display.
▷ Display shows reminder information.
▶ Briefly touch the display.
▶ Replace the water filter. (see 9.3 Water filter*)
▷ Water filter ensures optimum water quality.
▷ Reminder appears again after 6 months.

If you no longer wish to receive this reminder, you can deactivate it. (see Deactivating the reminder)

Replace the FreshAir activated carbon filter

Liebherr recommends: Replace the FreshAir activated carbon filter every 6 months.

Note
FreshAir activated charcoal filters can be purchased from the Liebherr-Hausgeräte store at home.liebherr.com/shop/de/deu/zubehor.html.

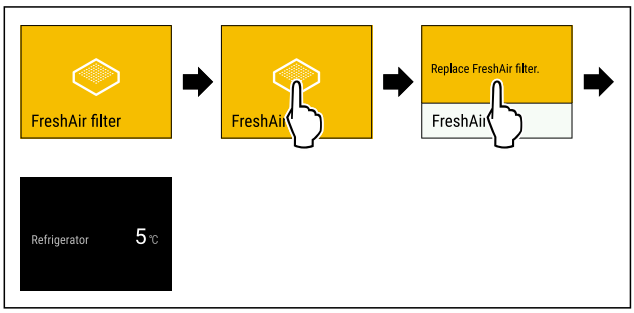

Fig. 119 Example illustration

▶ Briefly touch the display.
▷ Display shows reminder information.
▶ Briefly touch the display.
▶ Replace the activated carbon filter. (see 9.1 FreshAir carbon filter)
▷ Activated carbon filter ensures optimum air quality in the cooling unit.
▷ Reminder appears again after 6 months.

If you no longer wish to receive this reminder, you can deactivate it. (see Deactivating the reminder)

8 Features

8.1 Door rack

Door racks are suitable for storing drinks and food. You can move door racks for your own individual use and take them apart for cleaning. However, Liebherr recommends using the door racks in the position in the door as delivered from the factory.

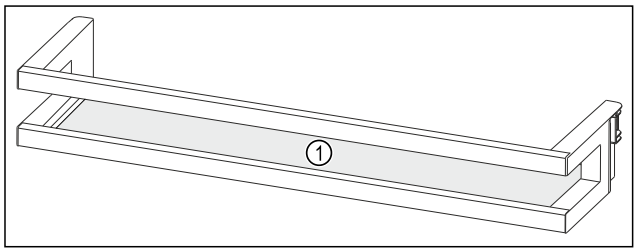

Fig. 120 Example illustration, Door rack
(1) Shelf

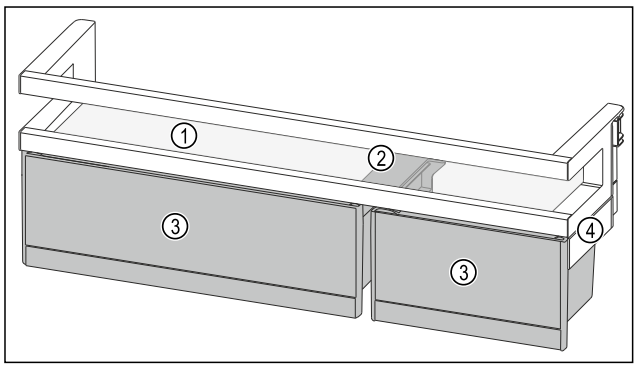

*Fig. 121 Example illustration, Door racks with VarioBoxes**
(1) Shelf
(2) Holding part for VarioBoxes
(3) VarioBoxes
(4) Side part

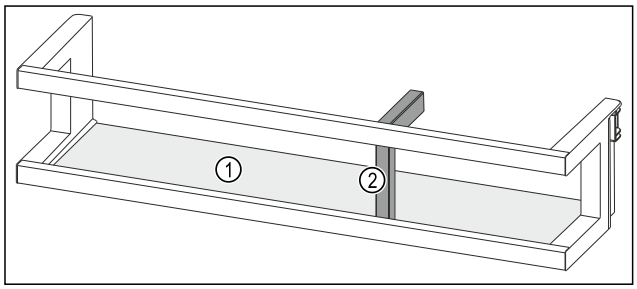

*Fig. 122 Example illustration, Door rack with bottle holder**
(1) Shelf
(2) Bottle holder

The following table shows examples of what can be stored in each door rack. Do not exceed the maximum loading weight of the door.

Door rack	Food
Door rack (see Fig. 120)	Butter, cheese, tinned food, tubes
Door rack with bottle holder (see Fig. 122) *	Bottles* The sliding bottle holder secures the bottles in the door rack.*
Door rack with VarioBoxes (see Fig. 121) *	small food items*

8.1.1 Removing VarioBoxes*

Either one or both VarioBoxes can be used. If you want to store particularly tall bottles in the door rack under the door rack with VarioBoxes, you can remove one or both VarioBoxes.

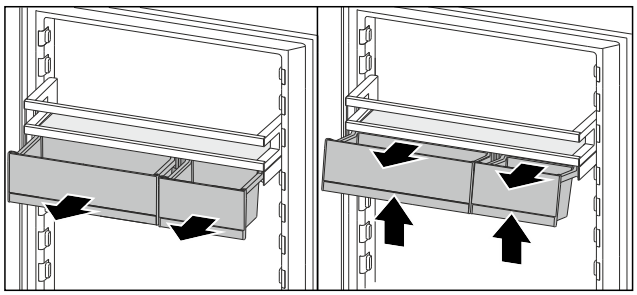

Fig. 123
▶ Pull out VarioBox to the end stop.
▶ Lift VarioBoxes out forwards.
▶ Take VarioBox out forwards.

8.1.2 Removing the door rack

Ensure that the following requirements are met:
❑ VarioBoxes have been removed. (see 8.1.1 Removing VarioBoxes*) *

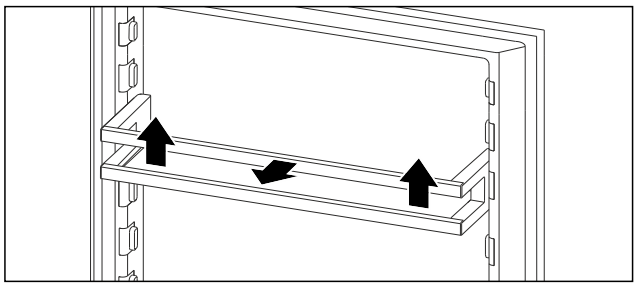

Fig. 124 Example illustration
▶ Push the door rack upwards.
▶ Pull the door rack forward.

8.1.3 Inserting the door rack

Ensure that the following requirements are met:
❑ VarioBoxes have been removed. (see 8.1.1 Removing VarioBoxes*) *

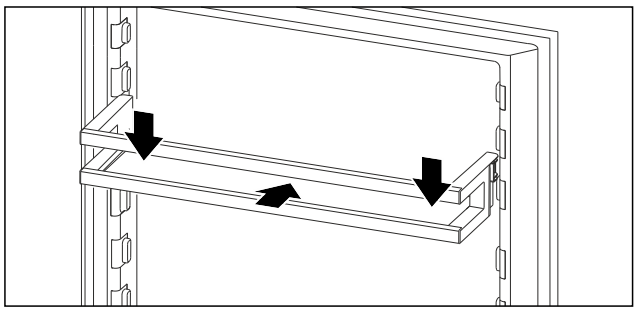

Fig. 125 Example illustration
▶ Slide in the door rack.
▶ Press the door rack down.

8.1.4 Inserting VarioBoxes*

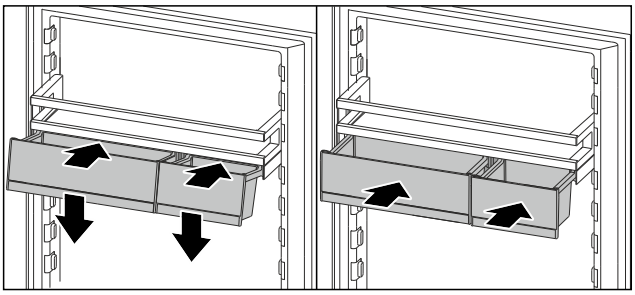

Fig. 126

▶ Place VarioBoxes at an angle on the rib of the door rack.
▶ Lower VarioBoxes.
▶ Push in the VarioBoxes.

8.1.5 Converting VarioBoxes*

Ensure that the following requirements are met:

❑ VarioBoxs have been removed. (see 8.1.1 Removing Vario-Boxes*)
❑ Door rack has been removed. (see 8.1.2 Removing the door rack)

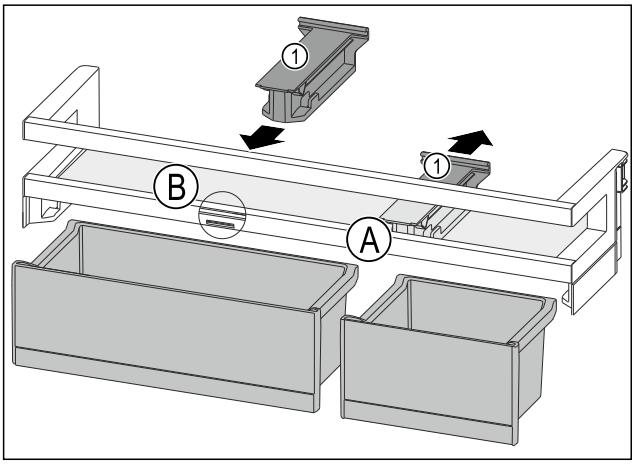

Fig. 127

▶ Take off the holding part *Fig. 127 (1)* in position *Fig. 127 (A)* backwards.
▶ Insert the holding part *Fig. 127 (1)* in position *Fig. 127 (B)*.
▶ Insert the door rack. (see 8.1.3 Inserting the door rack)

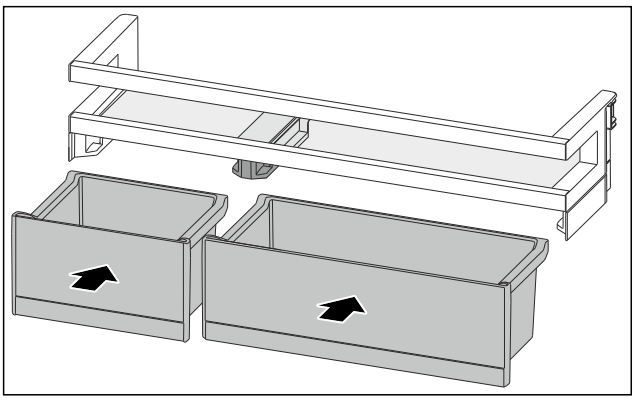

Fig. 128

▶ Insert the VarioBoxes in reverse order. (see Fig. 128)

8.1.6 Removing the bottle holder*

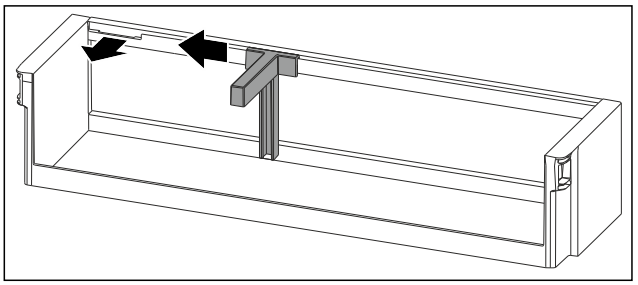

Fig. 129

▶ Slide the bottle holder to the side as far as the recess.
▶ Remove the bottle holder forwards.

8.1.7 Inserting the bottle holder*

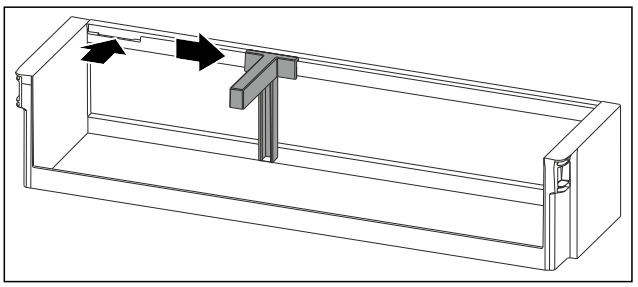

Fig. 130

▶ Insert the bottle holder in the recess.
▶ Push the bottle holder to the desired position to the side.

8.1.8 Dismantling the door rack*

It is possible to dismantle some of the door racks if you want to clean them or install or remove spare parts.

Dismantling the door rack

Ensure that the following requirements are met:

❑ Door rack has been removed. (see 8.1.2 Removing the door rack)

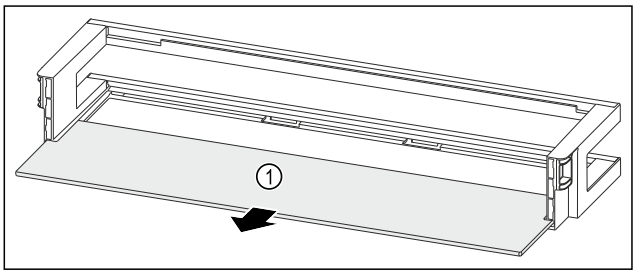

Fig. 131 Door rack with shelf

▶ Remove the shelf *Fig. 131 (1)*.

Dismantling the door rack with VarioBoxes*

Ensure that the following requirements are met:

❑ Door rack has been removed. (see 8.1.2 Removing the door rack)

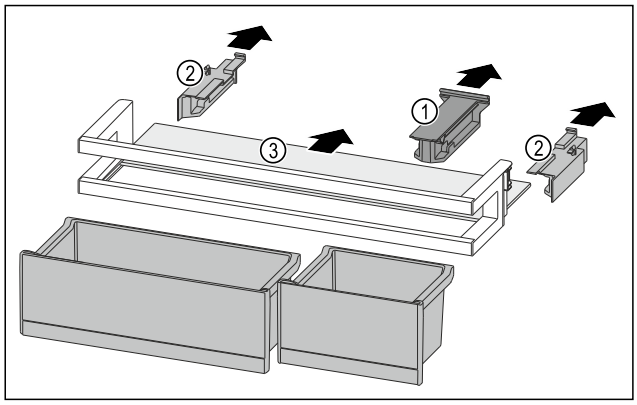

Fig. 132

- ▶ Remove the VarioBoxes. (see 8.1.1 Removing VarioBoxes*)
- ▶ Pull off the holding part *Fig. 132 (1)*.
- ▶ Pull off the side parts *Fig. 132 (2)*.
- ▶ Remove the shelf *Fig. 132 (3)*.

Dismantling the door rack with bottle holder*

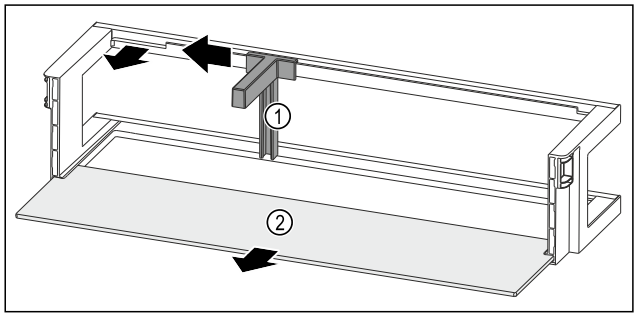

Fig. 133 Door rack with bottle holder and shelf

- ▶ Slide the bottle holder *Fig. 133 (1)* to the side as far as the recess.
- ▶ Remove the bottle holder *Fig. 133 (1)*.
- ▶ Remove the shelf *Fig. 133 (2)*.

8.1.9 Assembling the door rack*

Assembling the door rack

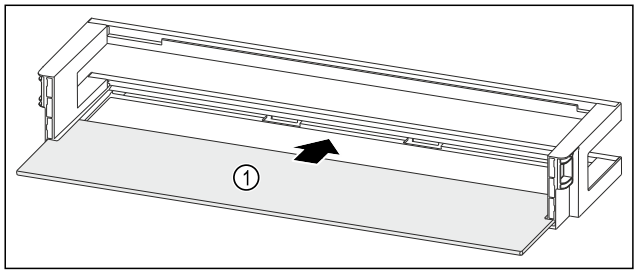

Fig. 134 Door rack with shelf

- ▶ Push the shelf *Fig. 134 (1)* into the side recesses.

Assembling the door rack with VarioBoxes*

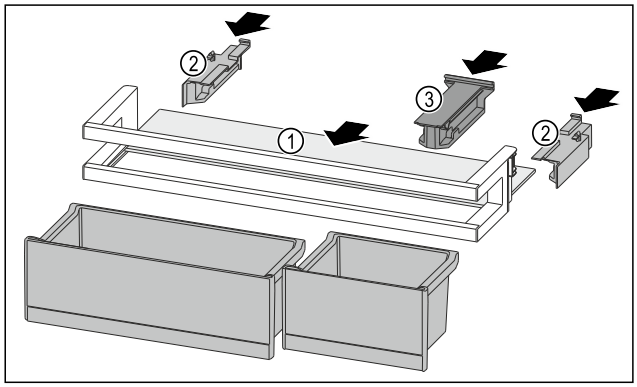

Fig. 135

- ▶ Push the shelf *Fig. 135 (1)* into the side recesses.
- ▶ Insert the side parts *Fig. 135 (2)*.
- ▶ Insert the holding part *Fig. 135 (3)*.
- ▶ Insert the VarioBoxes. (see 8.1.4 Inserting VarioBoxes*)

Assembling the door rack with bottle holder*

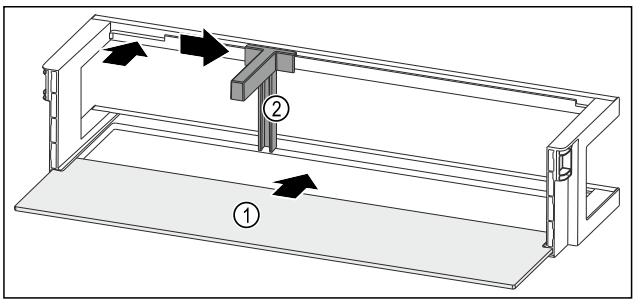

Fig. 136 Door rack with shelf

- ▶ Push the shelf *Fig. 136 (1)* into the side recesses.
- ▶ Insert the bottle holder *Fig. 136 (2)* in the recess.
- ▶ Push the bottle holder *Fig. 136 (2)* to the desired position to the side.

8.2 Shelves

8.2.1 Adjusting/removing the shelves

The shelves are prevented from being pulled out accidentally by pull out stops.

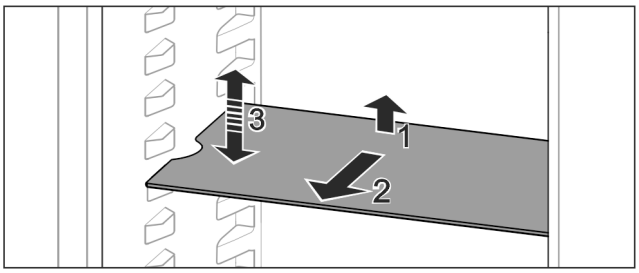

Fig. 137

- ▶ Lift the shelf and pull forward.
- ▷ Line up the side runner.
- ▶ Adjust the height of the shelf: Lift or lower it to the desired height and slide it in.

-or-

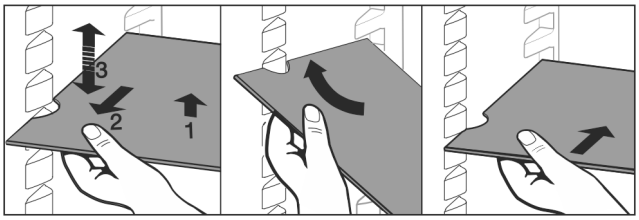

Fig. 138

- ▶ Remove the shelf completely: Pull it out to the front.
- ▶ Easier removal: Set the shelf at an angle.
- ▶ Insert the shelf again: Slide it in all the way.
- ▷ The pull-out stoppers point downwards.
- ▷ The pull-out stoppers are behind the front support.

8.3 Dividing shelf

8.3.1 Using the dividing shelf

The shelves are prevented from being pulled out accidentally by pull out stops.

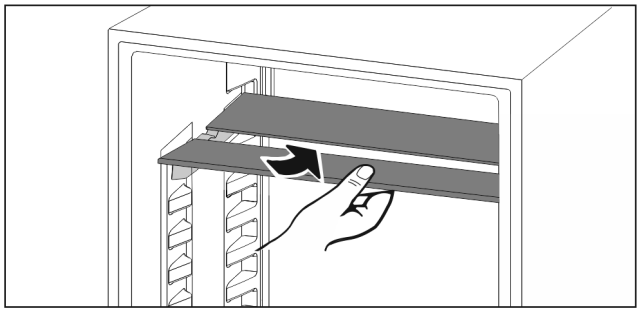

Fig. 139

▶ Push the dividing shelf underneath as shown.

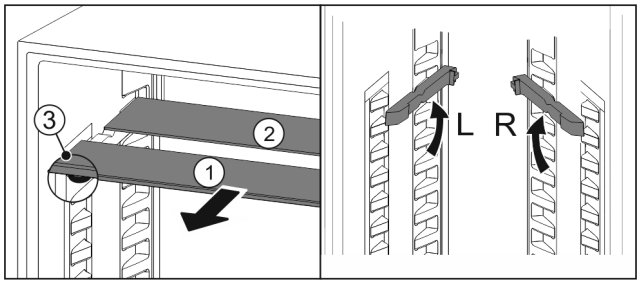

Fig. 140

Adjusting the height:

▶ Pull the glass panels out *Fig. 140 (1)* from the front, one at a time.
▶ Release the support rails and click in at the height you want.
▶ Slide in the glass panels one at a time.
▷ Flat pull-out stoppers at the front, right behind the support rails.
▷ High pull-out stoppers at the back.

Using both shelves:

▶ Hold the glass panel with one hand and pull it to the front.
▷ The glass panel *Fig. 140 (1)* and trim strip are at the front.
▷ The stops *Fig. 140 (3)* point down.

8.4 VarioSafe *

The VarioSafe offers space in the refrigerator compartment for small groceries, packages, tubes and jars, for example.

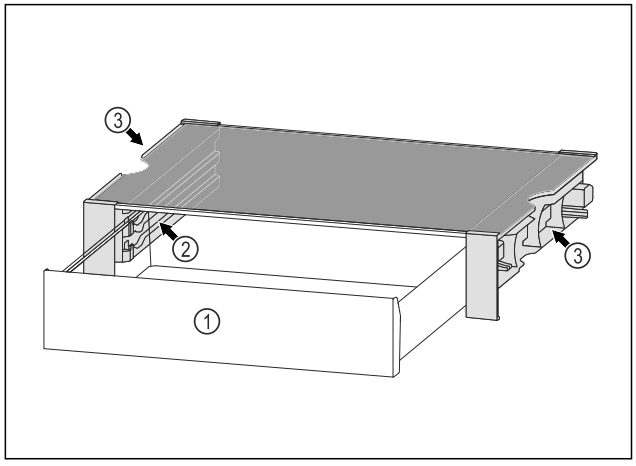

Fig. 141

(1) VarioSafe drawer

(2) Side panels with ribs for VarioSafe drawer

(3) Recesses on the left and right side panel

8.4.1 Inserting the VarioSafe

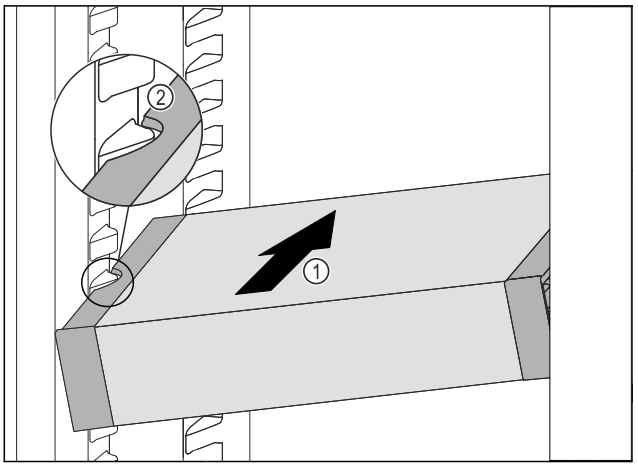

Fig. 142

▶ Insert the VarioSafe into the fridge section at an angle *Fig. 142 (1)* until the recesses in the side *Fig. 142 (2)* of the VarioSafe are at the level of the support rib in the fridge section.

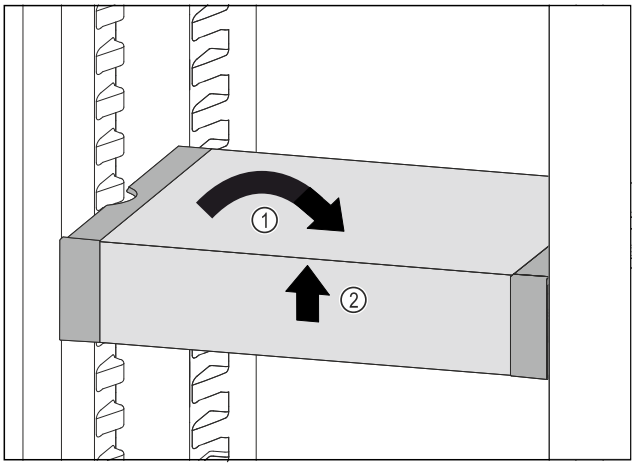

Fig. 143

▶ Set VarioSafe straight. *Fig. 143 (1)*
▶ Lift VarioSafe at the front. *Fig. 143 (2)*

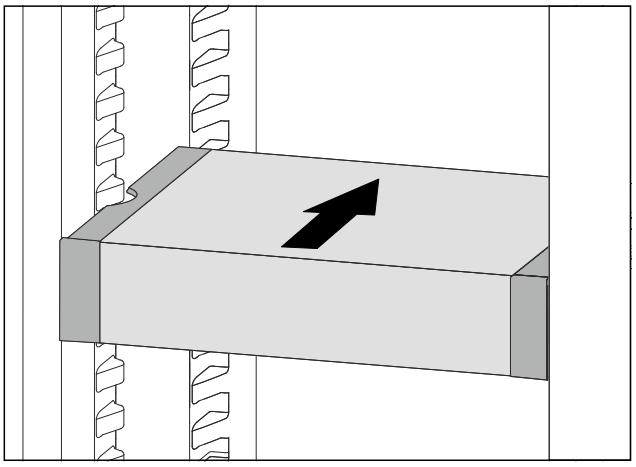

Fig. 144

▶ Lift VarioSafe up toward the front.
▶ Push VarioSafe in to the rear.
▶ Lower VarioSafe.
▷ VarioSafe audibly engages.
▷ VarioSafe is inserted.

8.4.2 Repositioning the VarioSafe

You can move the VarioSafe as a whole in the refrigerator compartment.

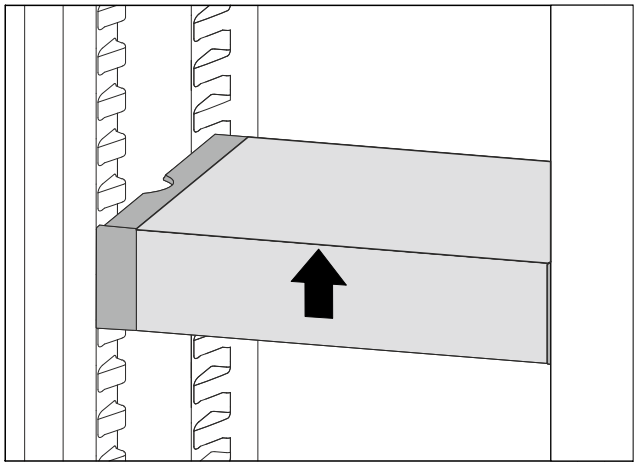

Fig. 145

▶ Lift VarioSafe at the front.

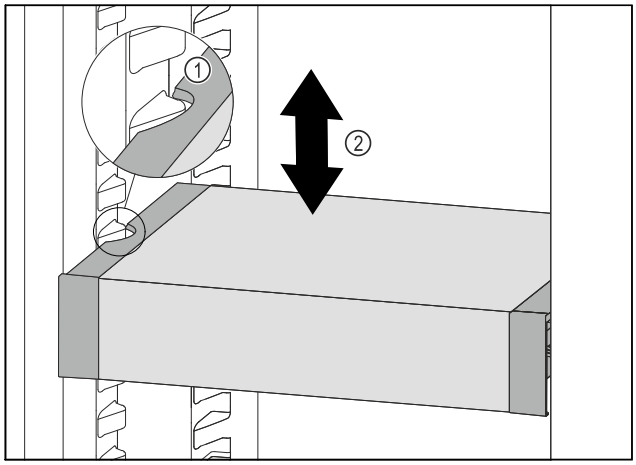

Fig. 146

▶ Pull VarioSafe forwards until the recesses in the side of the VarioSafe are at the level of the support rib in the refrigerator compartment. *Fig. 146 (1)*

▶ Move VarioSafe up or down in the refrigerator compartment until the desired height is reached. *Fig. 146 (2)*

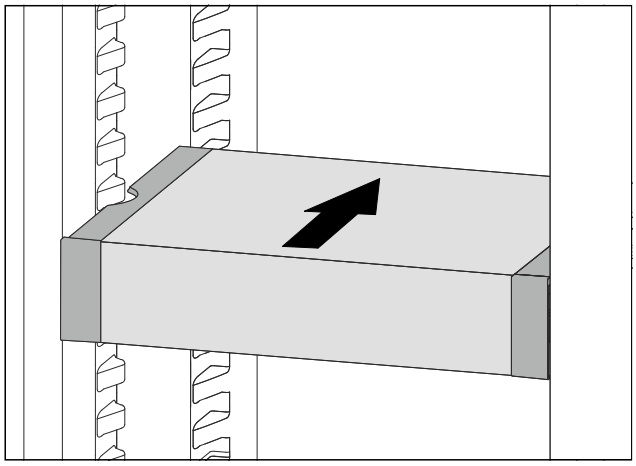

Fig. 147

▶ Lift VarioSafe at the front.
▶ Push VarioSafe in to the rear.
▷ VarioSafe audibly engages.
▷ VarioSafe is offset in height.

8.4.3 Moving the VarioSafe drawer

You can use the VarioSafe drawer at two different heights. If you would like to store taller foodstuffs in the VarioSafe drawer, slide the VarioSafe drawer in on the bottom rib. If you would like to store smaller foodstuffs in the VarioSafe drawer, slide the VarioSafe drawer in on the top rib.

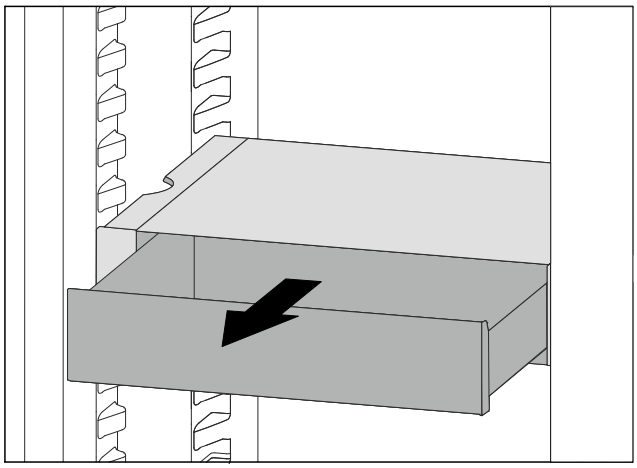

Fig. 148

▶ Pull out the VarioSafe drawer as far as it will go.
▶ Lift the VarioSafe drawer up at the front.
▶ Remove the VarioSafe drawer to the front.

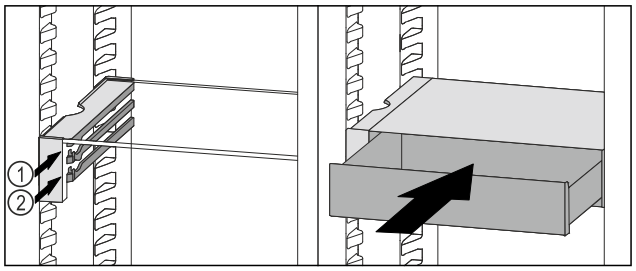

Fig. 149

▶ Lift the VarioSafe drawer up at the front.
▶ Place the VarioSafe drawer behind the stoppers on desired rib *Fig. 149 (1)* or *Fig. 149 (2)*.
▷ VarioSafe drawer is offset in height.

8.4.4 Removing the VarioSafe

You can remove the VarioSafe as a whole.

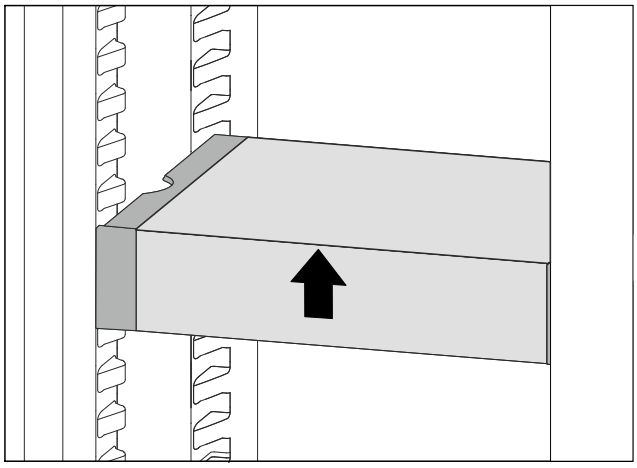

Fig. 150

▶ Lift VarioSafe at the front.

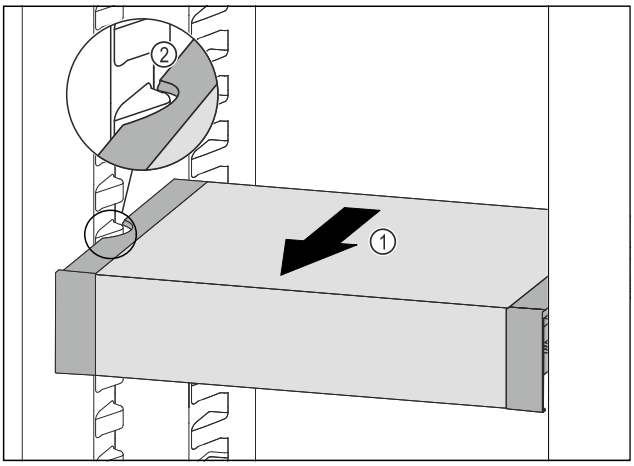

Fig. 151

▶ Pull VarioSafe forwards *Fig. 151 (1)* until the recesses in the side of the VarioSafe are at the level of the support rib in the fridge section. *Fig. 151 (2)*

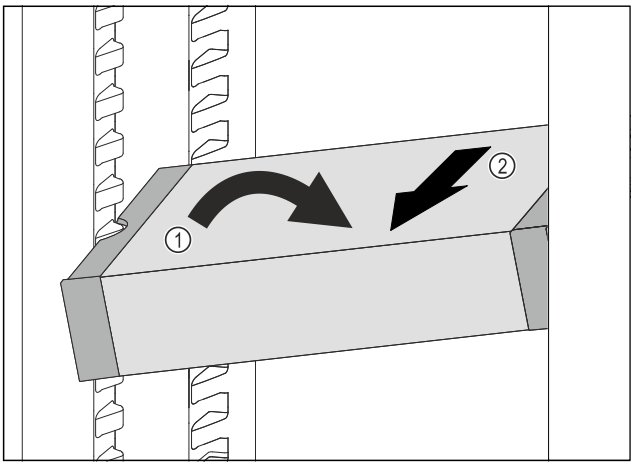

Fig. 152

▶ Set VarioSafe in refrigerator compartment at an angle. *Fig. 152 (1)*
▶ Take VarioSafe out to the front. *Fig. 152 (2)*
▷ VarioSafe is removed.

8.4.5 Disassembling the VarioSafe

You can disassemble the VarioSafe into its individual parts if you want to clean the VarioSafe or if you need to install or remove parts.

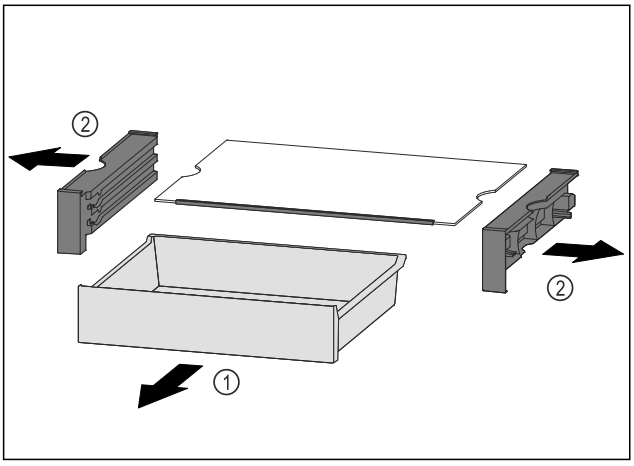

Fig. 153

▶ Remove VarioSafe as a whole. (see 8.4.4 Removing the VarioSafe)
▶ Disassemble VarioSafe according to the illustration.

8.5 InfinitySpring*

The built-in water dispenser is great for drinking water. The water temperature depends on the temperature in the fridge.

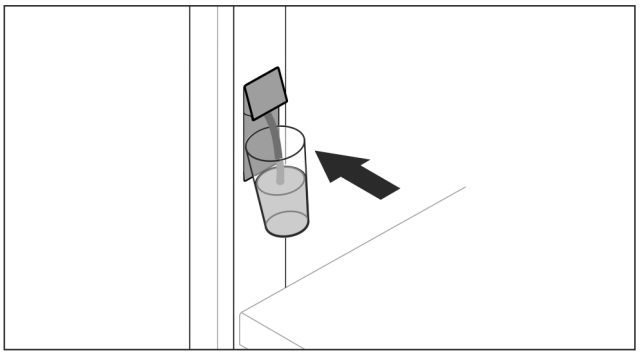

Fig. 154

▶ Push the glass against the bottom pushbutton of the dispenser.
▷ Pouring unit moves out: Water flows into the glass.
▶ Avoid spillages: Remove your cup slowly.
For more water:
▶ If the water flow stops, remove the water tank and push your container against the bottom pushbutton of the dispenser again.

8.6 Adjustable bottle shelf

Either the glass shelf or the variable bottle rack can be used in the bottom section of the refrigerator. The glass shelf is inserted at delivery.

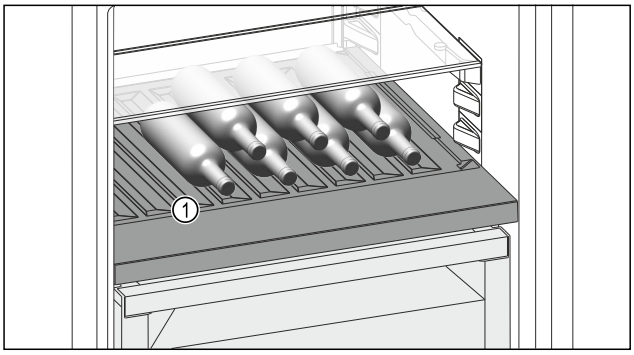

Fig. 155 Example illustration
(1) Variable bottle rack

8.6.1 Using the variable bottle rack

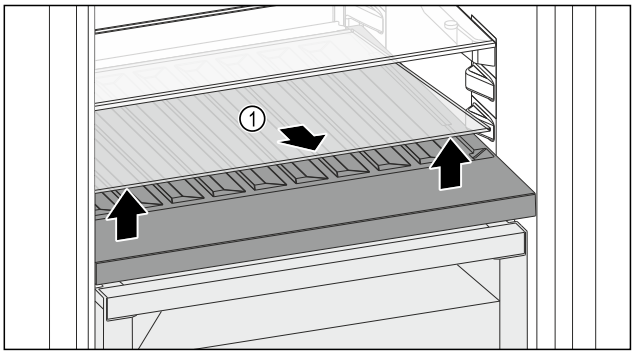

Fig. 156

▶ Lift the glass shelf *Fig. 156 (1)* at the front and remove.
▶ Store the glass shelf *Fig. 156 (1)* in a safe place outside the appliance.

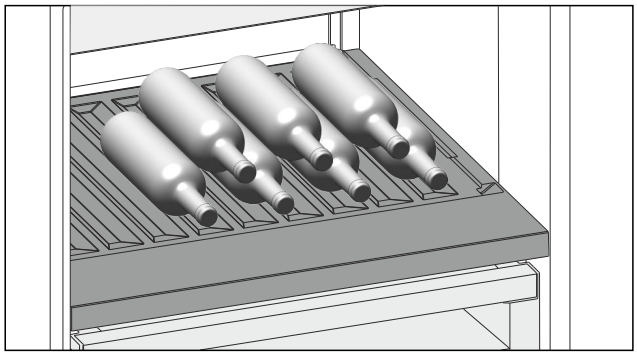

Fig. 157

▶ Place bottles in the back row with their bases against the back wall. (see Fig. 157)

Note
When the bottles protrude over the variable bottle rack at the front:

▶ Set the lower door rack one position higher.

8.6.2 Using the glass shelf

Ensure that the following requirements are met:

❑ Bottles have been removed.

❑ Variable bottle rack has been cleaned.
(see 9.5 Removing / inserting the variable bottle rack)
(see 9.8.4 Clean the components)

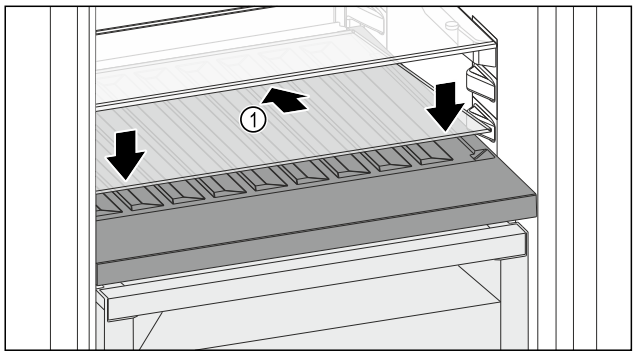

Fig. 158

▶ Place the glass shelf *Fig. 158 (1)* at an angle, sloping it downwards and backwards.

▶ Lower the glass shelf *Fig. 158 (1)* at the front.

8.7 Drawers

You can remove the drawers for cleaning.

You can remove the drawers to use VarioSpace.*

The way to remove/insert the drawers varies depending on the pull-out system. Your appliance can contain various pull-out systems.

Note
The energy consumption increases and the cooling power goes down if ventilation is not sufficient.

▶ Leave the bottom drawer in the appliance!

▶ Always leave the fan air vents clear on the back wall!

8.7.1 Drawer on appliance base or glass shelf

The drawer runs directly on the appliance base or on a glass shelf. There are no rails.

When you remove the drawers, you can use the glass shelves below them as storage shelves.

Removing drawer

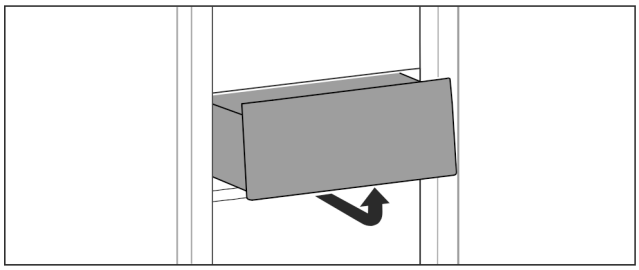

Fig. 159

▶ Remove drawer as shown in the illustration.

Inserting drawer

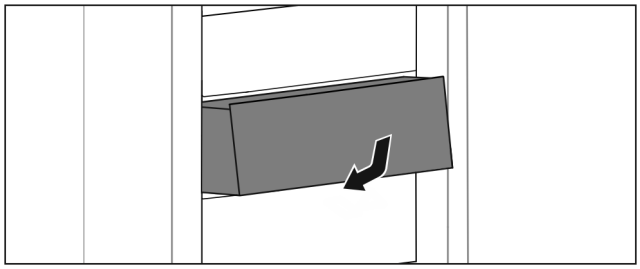

Fig. 160

▶ Insert drawer as shown in the illustration.

8.7.2 Drawer on telescopic rails

The drawer runs on extendible rails (telescopic rails). There are fully extendible telescopic rails and telescopic rails with partial pull-out. Drawers which are fully extendible can be pulled out fully from the appliance. Drawers with partial pull-out cannot be removed fully from the appliance. The system in your appliance depends on the type of appliance.

Fully extendible*

If you have fully extendible rails, there is a clamp located at the back on the left and right of the rail.

Removing drawer

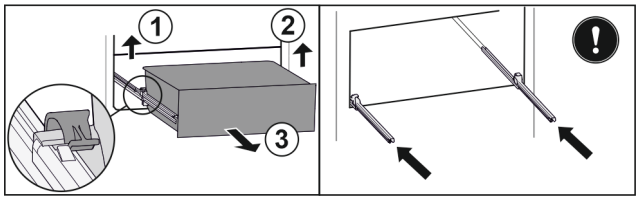

Fig. 161

▶ Pull out drawer as far as it will go.

▶ Lift left clamp and simultaneously pull drawer forwards on the left. *Fig. 161 (1)*

▶ Lift right clamp and simultaneously pull drawer forwards on the right. *Fig. 161 (2)*

▶ Remove drawer to the front. *Fig. 161 (3)*

▶ Slide rails in.

Inserting drawer

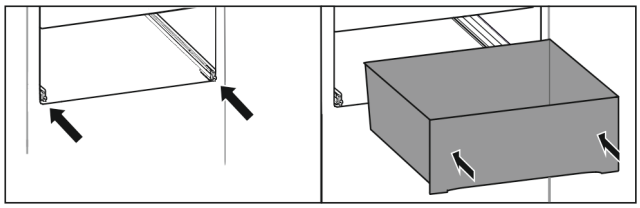

Fig. 162

▶ Slide rails in.

▶ Place drawer on rails.

▶ Slide in drawer to the back.

▷ Drawer latches in audibly at the back.

Partial pull-out fridge compartment*

Removing drawer

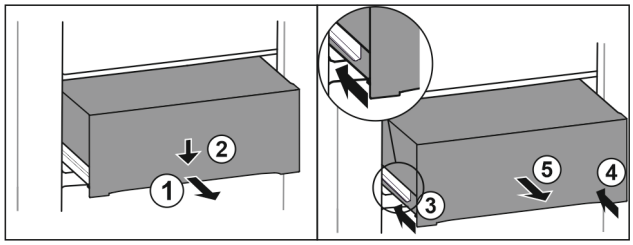

Fig. 163

▶ Pull out drawer half-way. *Fig. 163 (1)*
▶ Push the drawer down at the front. *Fig. 163 (2)*
▶ Push the left rail in by about 2 cm. *Fig. 163 (3)*
▶ Push the right rail in by about 2 cm. *Fig. 163 (4)*
▶ Remove drawer to the front. *Fig. 163 (5)*

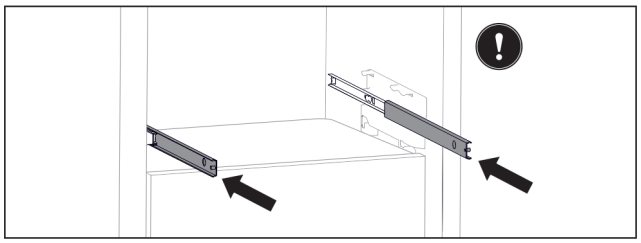

Fig. 164

If the rails are not yet fully inserted after removing the drawer:

▶ Push rails in completely.

Inserting drawer

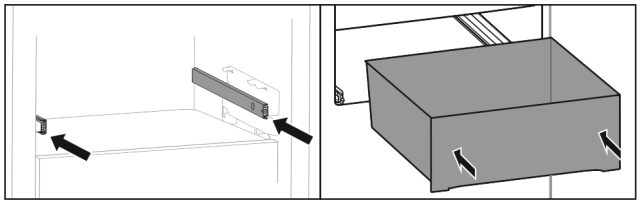

Fig. 165

▶ Slide rails in.
▶ Place drawer on rails.
▶ Slide in drawer to the back.

Partial pull-out freezer compartment*

Note

If the magnet on the top drawer in the freezer compartment is damaged or removed, the door sensors will malfunction.

▶ Do not damage or remove the magnet.

Removing drawer

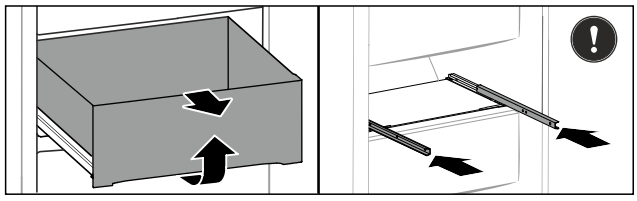

Fig. 166

If the drawer is in the top freezer:

▶ Pull out drawer as far as it will go.
▶ Raise the drawer forwards.
▶ Remove the drawer forwards.
▶ Slide rails in.

-or-

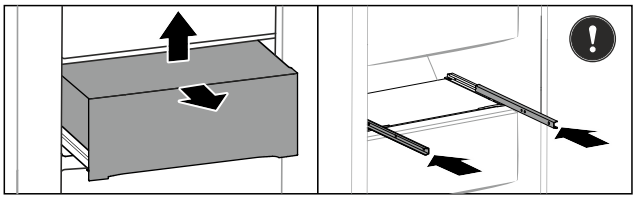

Fig. 167

If the drawer is in the middle part of the freezer compartment:

▶ Pull out drawer half-way.
▶ Lift the drawer from the bottom rear.
▶ Remove the drawer forwards.
▶ Slide rails in.

Inserting drawer

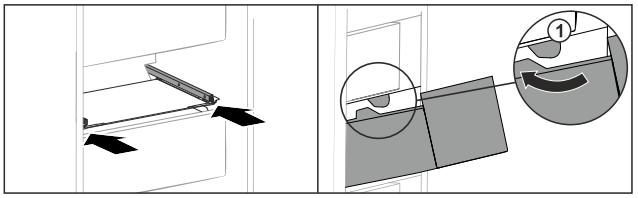

Fig. 168

▶ Slide rails in.
▶ Guide drawer around the stoppers *Fig. 168 (1)*.
▶ Place drawer on rails.
▶ Slide in drawer to the back.

8.8 Compartment lid for Fruit & Vegetable Safe

The compartment lid ensures constant levels of humidity.

The compartment lid is directly on the drawer and can be covered by shelves or additional drawers.

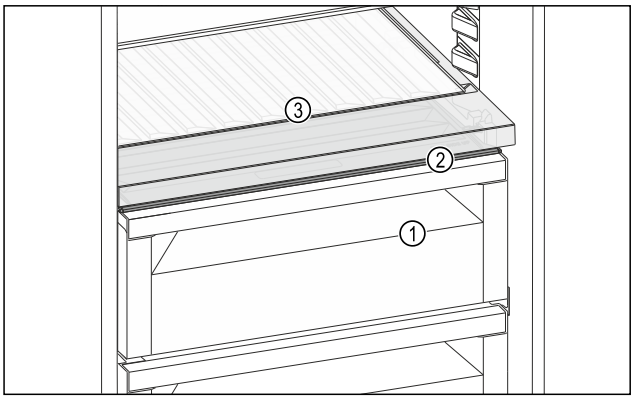

Fig. 169 Example illustration, compartment lid for Fruit & Vegetable Safe

(1) Fruit & Vegetable Safe
(2) Compartment lid for Fruit & Vegetable Safe
(3) Variable bottle rack

8.8.1 Reducing the air humidity in the drawer

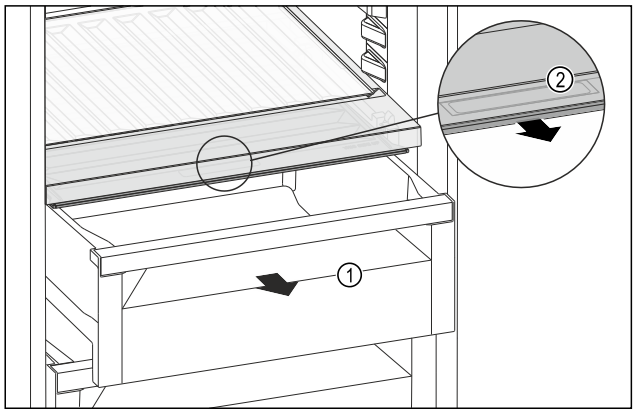

Fig. 170

▶ Pull out the drawer *Fig. 170 (1)*.
▶ Grasp the recessed grip *Fig. 170 (2)* on the compartment lid and pull the compartment lid forwards at the same time.
▷ When the drawer is closed, there is a small gap between the compartment lid and the drawer.
▷ Using HydroBreeze is not possible. (see 8.9 HydroBreeze*) *

8.8.2 Increasing the air humidity in the drawer

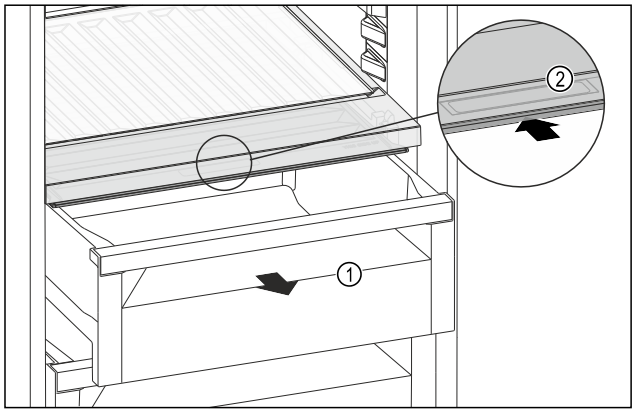

Fig. 171

▶ Pull out the drawer *Fig. 171 (1)*.
▶ Grasp the recessed grip *Fig. 171 (2)* on the compartment lid and push the compartment lid backwards at the same time.
▷ When the drawer is closed, the compartment lid seals with the drawer.
▷ Using HydroBreeze is possible. (see 8.9 HydroBreeze*) *

8.8.3 Using Fruit & Vegetable Safe as Meat & Dairy Safe

You can use the Fruit & Vegetable Safe as Meat & Dairy Safe. To do this, you must reduce the humidity in the drawer. (see 8.8.1 Reducing the air humidity in the drawer)

8.8.4 Using Fruit & Vegetable Safe with HydroBreeze*

You can use the Fruit & Vegetable Safe with HydroBreeze. To do this, you must increase the humidity in the drawer. (see 8.8.2 Increasing the air humidity in the drawer)

8.9 HydroBreeze*

HydroBreeze emits a mist over the refrigerated goods to provide moisture every time the door is opened.

The HydroBreeze and its water tank are located in the adjustable bottle shelf.

Ensure that the following conditions are met:

- The water tank is clean. (see 9.8.4 Clean the components)
- The water tank is properly engaged.
- The humidity in the drawer is set to high air humidity. (see 8.8.2 Increasing the air humidity in the drawer)
- HydroBreeze is activated. (see HydroBreeze*)

8.9.1 Fill the water tank

WARNING
Unclean water!
Contaminants.
▶ Only fill with drinking water.
▶ The HydroBreeze is off: empty water tank.
▶ The HydroBreeze is no longer in use: empty water tank.

NOTICE
Sugar-content liquids!
Damage to HydroBreeze.
▶ Only fill with drinking water.

Note
Only use filtered, decarbonised water for the best quality drinking water and to make the HydroBreeze, work smoothly.
This water quality can be achieved using a table water filter of the kind available in trade retail outlets.
▶ Only ever fill the water tank with filtered, decarbonised drinking water.

The water tank is built into the adjustable bottle shelf (see 1.2 Overview of the appliance and equipment) .

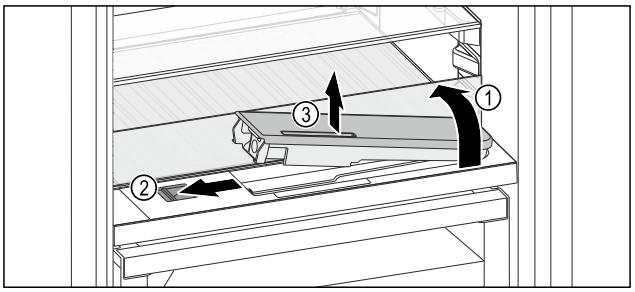

Fig. 172

▶ Press on the back-left corner of the front glass plate.
▷ The glass panel folds up at the front.
▶ Lift the glass panel and fold towards the rear until it clicks into place *Fig. 172 (1)*.
▷ Glass panel stands upright.
▶ Slide the slider *Fig. 172 (2)* to the left.
▷ The water tank jumps out of its recess.
▶ Remove the water tank *Fig. 172 (3)*.
▶ Cleaning the water tank (see 9.8.4 Clean the components) .
Square opening:
▶ Fill with drinking water up to the marker.
▶ Insert the water tank into the recess, bottom first.
▶ Slowly lower the front part and push the tank in.
▷ The water tank is clicked into place.

8.9.2 Dismantling the water tank

You can remove the HydroBreeze water tank for cleaning.

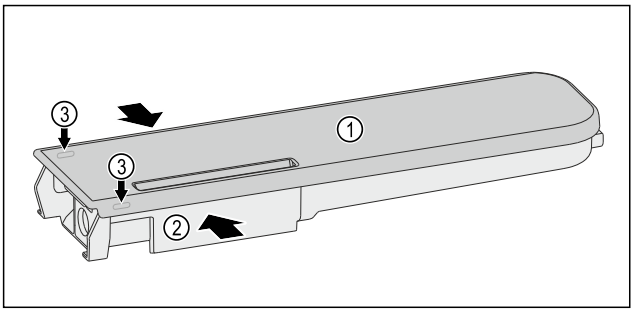

Fig. 173

▶ Push the water tanks *Fig. 173 (2)* together, leverage the cover *Fig. 173 (1)* carefully over the latching tabs *Fig. 173 (3)* and lift it up.

▷ The cover is released.

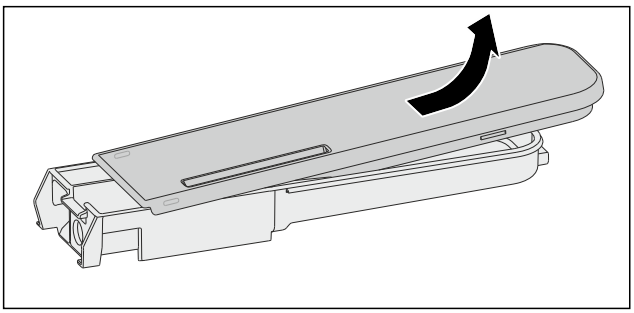

Fig. 174

▶ Move the cover *Fig. 173 (1)* slightly forwards and back, and remove to the top.

▷ The water tank has been dismantled.

8.10 Glass shelves

You can remove the glass shelves under the drawers for cleaning.

You can remove the glass shelves under the drawers to use VarioSpace.*

8.10.1 Removing / inserting the glass shelf

Make sure that the following requirements are fulfilled:

❑ Glass shelf under the drawer: The drawer has been removed. (see 8.7 Drawers)

Removing glass shelf

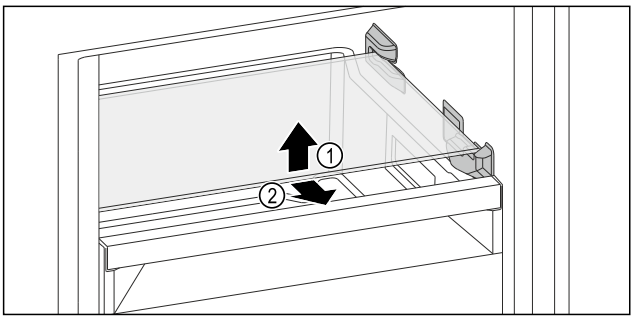

*Fig. 175 Example illustration, glass shelf**

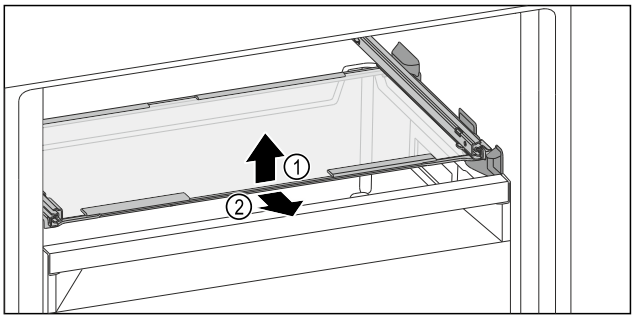

*Fig. 176 Example illustration, glass shelf**

▶ Lift the glass shelf forwards.

▶ Remove the glass shelf forwards.

Inserting glass shelf

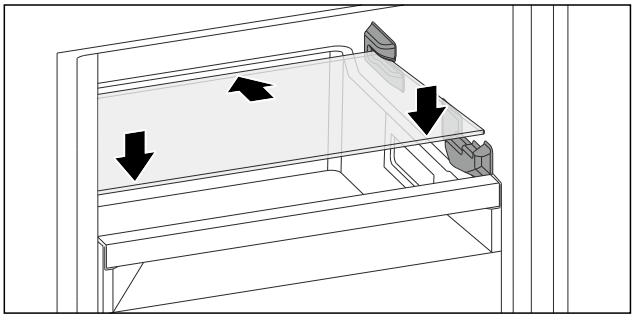

*Fig. 177 Example illustration, glass shelf**

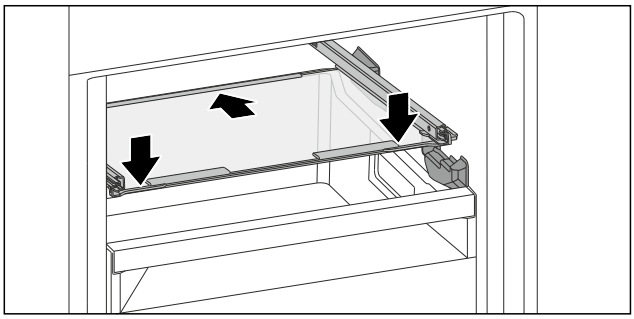

*Fig. 178 Example illustration, glass shelf**

▶ Place the glass shelf at an angle behind the stoppers.

▶ Lower glass shelf.

▶ Slide in glass shelf to the back.

8.11 EasyTwist-Ice*

With the EasyTwist-Ice you can make enough ice cubes for the whole household. The EasyTwist-Ice is supplied with water via a water tank.

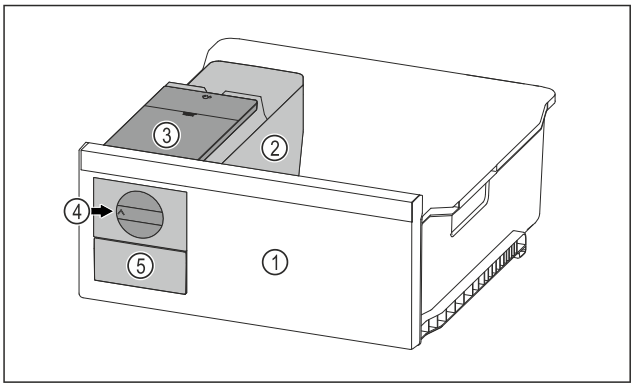

Fig. 179 Example illustration

(1) Freezer drawer with EasyTwist-Ice
(2) Body with ice cube tray
(3) Water tank
(4) Rotary knob
(5) Ice cube drawer

Note
Do not change the position of the freezer drawer with the EasyTwist-Ice in the appliance.

8.11.1 Making ice cubes

The amount of ice cubes you can make in a given period of time with the EasyTwist-Ice depends on the freezer temperature of the appliance. The lower the temperature in the appliance, the more ice cubes you can make.

Maximum number of ice cubes in the ice cube tray:	20 ice cubes
Maximum capacity of the ice cube drawer:	40 ice cubes (equivalent to two ice cube batches)
More information about the time needed for ice cube production:	(see 10.1 Technical specifications)

Make sure that the following requirements are fulfilled:

❑ Components of the EasyTwist-Ice have been cleaned.

Filling the water tank

WARNING
Risk of poisoning due to contaminated water!
▶ Only fill the water tank with potable water.

NOTICE
Sugar-content liquids!
Damage to EasyTwist-Ice.
▶ Only fill with cold drinking water.

Note
Using filtered, decarbonised water ensures the best-tasting drinking water for your ice cubes.
This water quality can be achieved using a table water filter of the kind available in trade retail outlets.
▶ Always fill the water tank only with filtered, decarbonised drinking water.

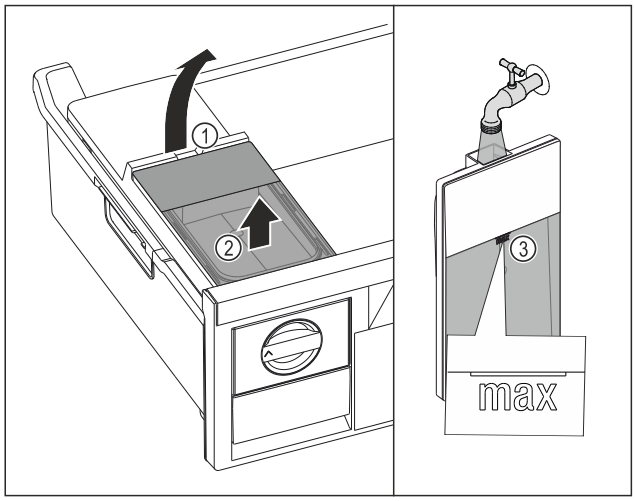

Fig. 180

▶ Pull out freezer drawer as far as it will go.
▶ Lift the water tank at the recess *Fig. 180 (1)*.
▶ Remove the water tank by lifting it upwards. *Fig. 180 (2)*
▶ Fill the water tank with drinking water up to the mark *Fig. 180 (3)*.

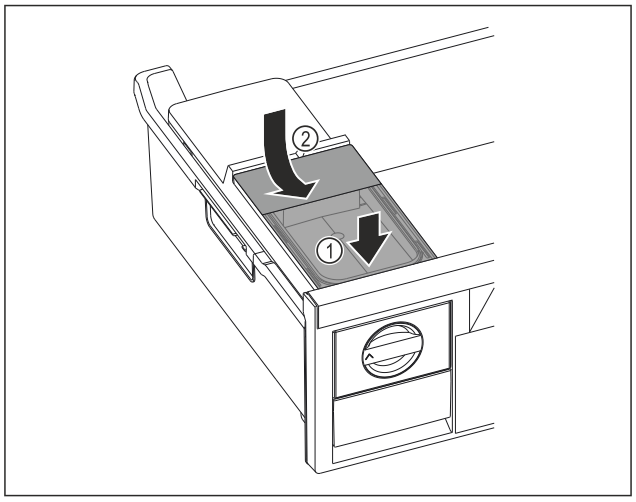

Fig. 181

▶ Position the water tank at the front. *Fig. 181 (1)*
▶ Lower the water tank at the rear. *Fig. 181 (2)*
▶ Slide in the freezer drawer.

Releasing the ice cubes

Make sure that the following requirements are fulfilled:

❑ The required time for the production of ice cubes has been observed. (see 10.1 Technical specifications)
❑ Freezer drawer is fully inserted.
❑ Ice cube drawer is fully inserted.

▶ Turn the rotary knob *Fig. 179 (4)* clockwise as far as it will go.
▷ Ice cubes fall from the ice cube tray into the ice cube drawer *Fig. 179 (5)*.
If all the ice cubes do not come out of the ice cube tray:
▶ Turn the rotary knob clockwise several times to the stop.

8.12 IceMaker*

The IceMaker will produce ice cubes for household use only.

Ensure that the following conditions are met:

- The IceMaker is clean. (see 9 Maintenance)
- IceMaker drawer is cleaned.
- IceMaker drawer is fully inserted.

8.12.1 Producing ice cubes

The volume depends on the freezing temperature. The colder the temperature, the more ice cubes the system can produce in a certain time period.

After the IceMaker is turned on for the first time, it can take up to 24 hours for the first ice cubes to be made.
▶ Activate the IceMaker function.
▶ Producing many ice cubes: Activate the MaxIce function.
▶ To make a high number of ice cubes: Move the divider in the IceMaker drawer or remove it completely.*
▶ Distribute the ice cubes evenly in the drawer to increase the capacity.
▶ Closing the drawer: IceMaker starts making ice cubes again automatically.

Note
When a certain level is reached in the IceMaker drawer, it stops producing ice cubes. The IceMaker does not fill the drawer all the way to the top.

8.12.2 Using the drawer with the IceMaker deactivated

If you deactivate the IceMaker, then you can use the entire IceMaker drawer as a freezer drawer.

▶ Deactivate IceMaker. (see Deactivating the IceMaker and MaxIce)

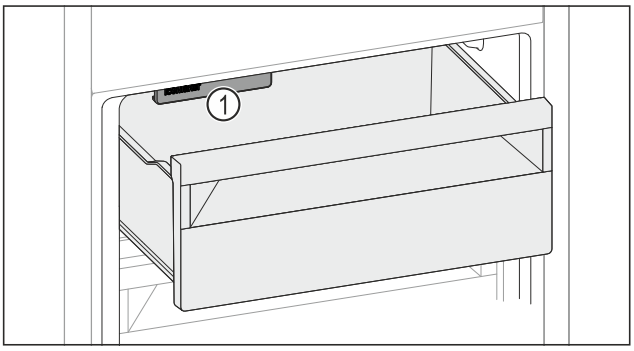

Fig. 182

▶ Place food in drawer.
If you put food in the left side of the drawer:
▶ Watch out for the IceMaker *Fig. 182 (1)*.

8.13 VarioSpace*

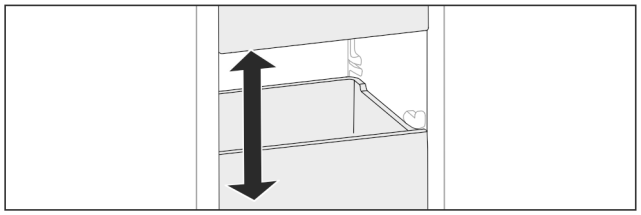

Fig. 183

You can remove drawers and glass panels from your appliance. This provides more room for large food items such as poultry, joints of meat, large game, and tall baked products. You can then freeze these items whole for later preparation.

▶ Note the weight limits on the drawers and glass panels (see 10.1 Technical specifications) .

8.14 Butter dish*

8.14.1 Opening/closing the butter dish

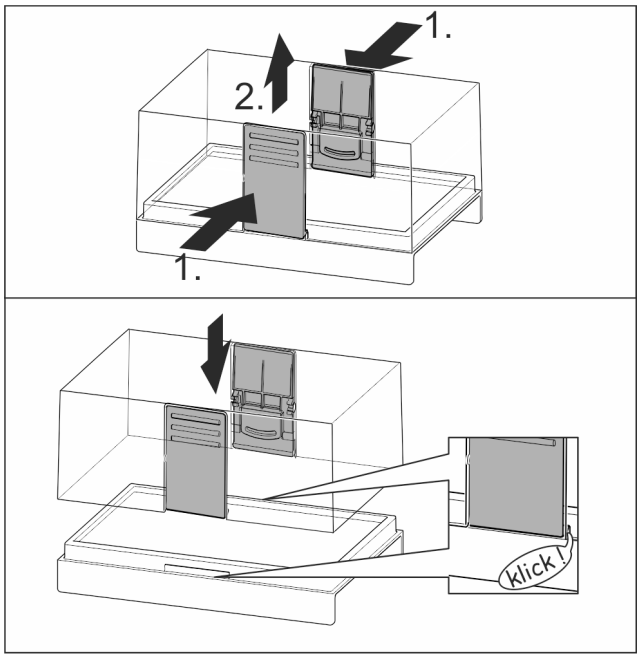

Fig. 184

8.14.2 Dismantling the butter dish

You can take the butter dish apart for cleaning.

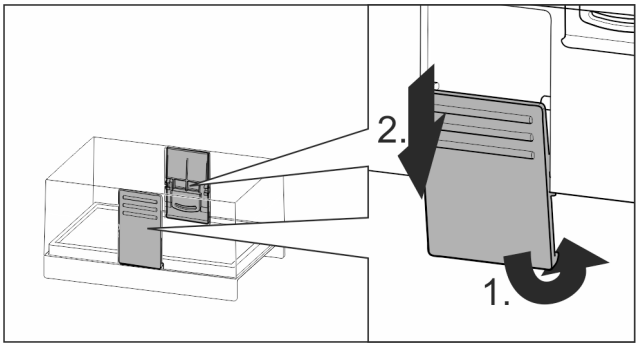

Fig. 185

▶ Disassembling the butter dish.

8.15 Egg rack*

You can pull out and turn the egg rack. You can use both sides of the egg rack so you can label specifics like the purchase date.

8.15.1 Using the egg rack

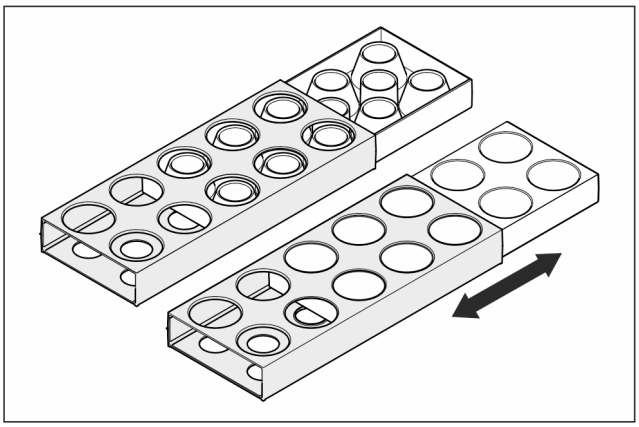

Fig. 186

▶ Top layer: for storing hen eggs.
▶ Bottom layer: for storing quail eggs.

8.16 Bottle holder*

8.16.1 Using the bottle holder

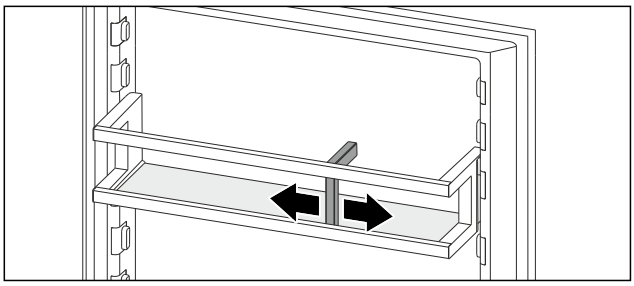

Fig. 187

▶ Push the bottle holder onto the bottles.
▷ The bottles are prevented from falling over.

8.17 FlexSystem*

8.17.1 Using the FlexSystem

The FlexSystem helps you store and organise your food in a clear and flexible way. It lets you clearly divide your food into fruit, vegetables or by use-by dates, for example.

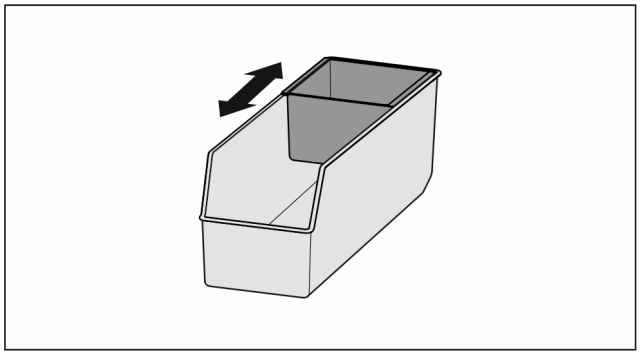

Fig. 188

▶ Move the inner shell.

8.17.2 Removing the FlexSystem

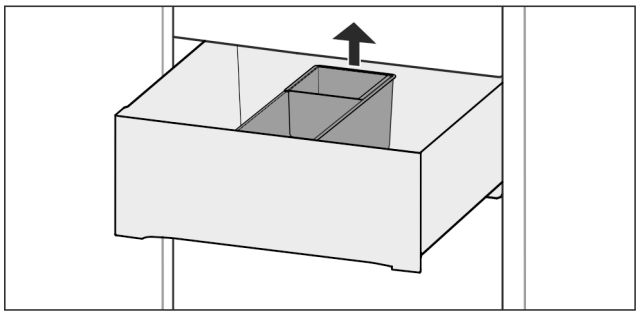

Fig. 189

▶ Lift the FlexSystem from the back.
▶ Pull up and out.

8.17.3 Inserting the FlexSystem

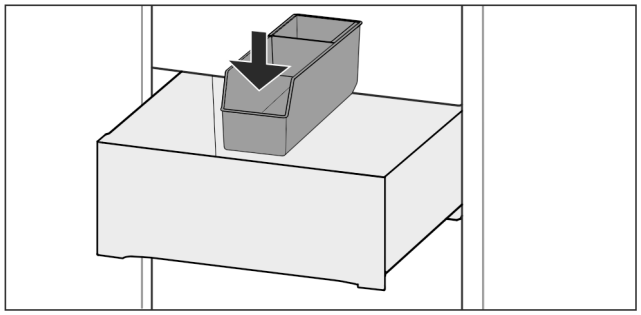

Fig. 190

▶ Insert the FlexSystem front-first.
▶ Lower the rear part.

8.17.4 Disassembling the FlexSystem

You can take the FlexSystem apart for cleaning.

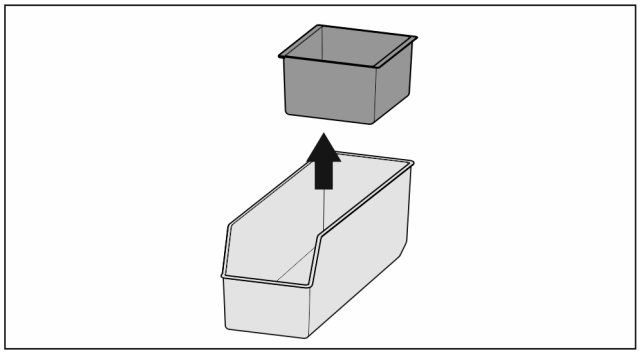

Fig. 191

▶ Disassembling the FlexSystem

8.18 Ice cube tray with cover*

8.18.1 Using the ice cube tray

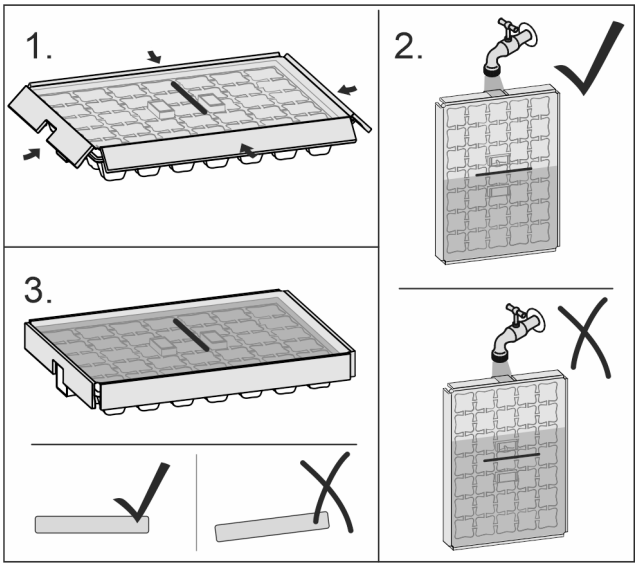

Fig. 192

When the water is frozen:

▶ Hold ice cube tray under hot water for a short time.
▶ Remove the lid.
▶ Gently turn the ends of the ice cube tray in opposite directions.
▶ Release the ice cubes.

8.18.2 Dismantling the ice cube tray

You can take the ice cube tray apart for cleaning.

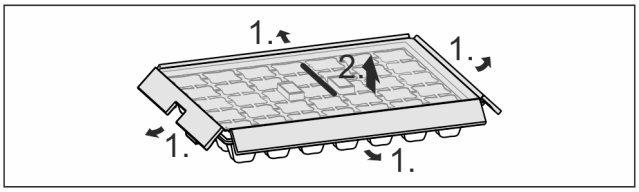

Fig. 193

▶ Disassembling the ice cube tray.

8.19 Flexible ice compartment divider*

The IceMaker's ice cube drawer has a flexible ice compartment divider. This allows you to store larger quantities of ice cubes or additional food items as needed. You can move or remove the ice compartment divider.

8.19.1 Moving in the flexible ice compartment divider

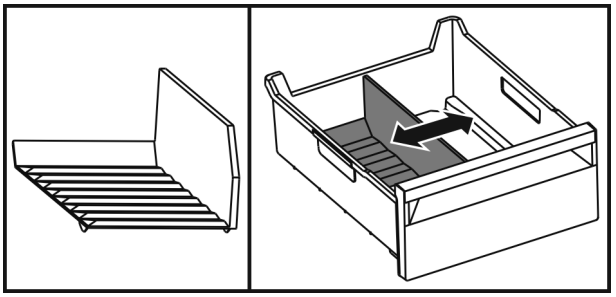

Fig. 194 Example illustration of the ice compartment divider

▶ Move the ice compartment divider to the desired position.

* Depending on model and options

8.19.2 Removing the flexible ice compartment divider

Make sure that the following requirements are fulfilled:

❑ Ice cube drawer is removed. (see 8.7 Drawers)

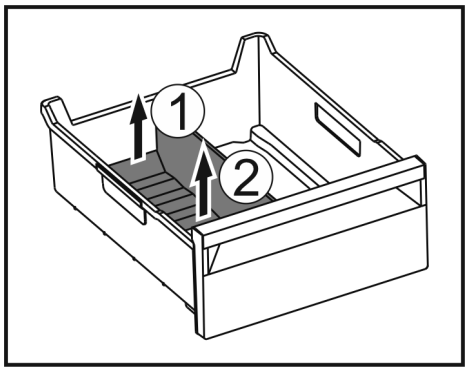

Fig. 195

▶ Lift the rear part of the ice compartment divider. *Fig. 195 (1)*

▶ Remove the ice compartment divider upwards. *Fig. 195 (2)*

8.19.3 Putting in the flexible ice compartment divider

Make sure that the following requirements are fulfilled:

❑ Ice cube drawer is removed. (see 8.7 Drawers)

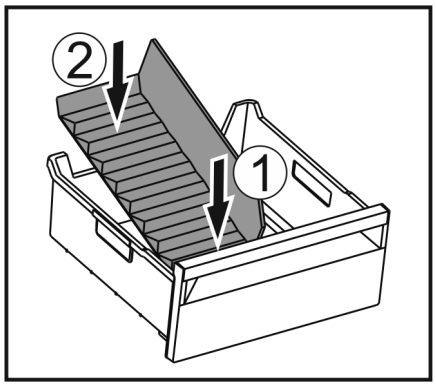

Fig. 196

▶ Insert the front part of the ice compartment divider. *Fig. 196 (1)*

▶ Lower the rear part of the ice compartment divider to the drawer bottom. *Fig. 196 (2)*

8.20 FlexCube*

The FlexCube has different sized openings, so you can store small items such as tubes, open yoghurt pots or quail eggs in it. The FlexCube fits into all Liebherr door racks, for example. If necessary, you can also set up several FlexCubes next to each other.

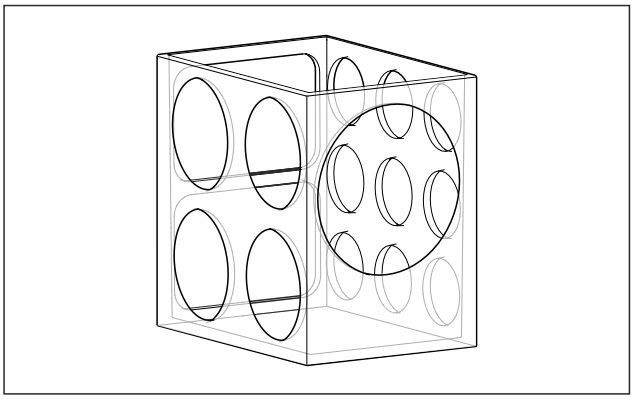

Fig. 197 Example illustration

Note

These accessories can be purchased from the Liebherr-Hausgeräte shop at home.liebherr.com/shop/de/deu/zubehor.html.

8.20.1 Using the FlexCube

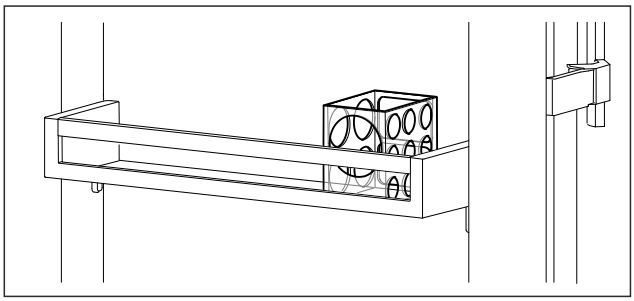

Fig. 198 Example illustration

▶ Insert the FlexCube in the door rack.

-or-

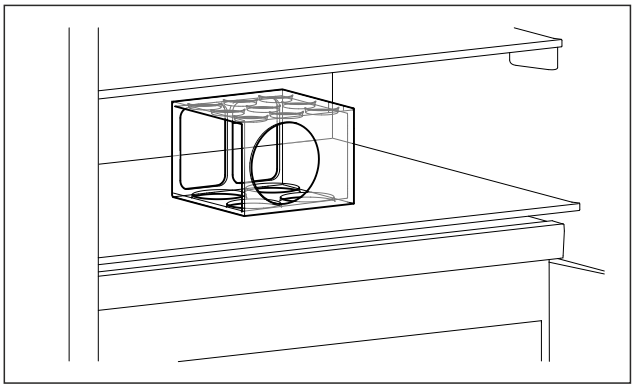

Fig. 199 Example illustration

▶ Place FlexCube on shelf.

▶ Sort small parts into the FlexCube for storage.

9 Maintenance

9.1 FreshAir carbon filter

The FreshAir carbon filter is in the compartment above the fan.

It guarantees the best air quality.

❑ Replace the carbon filter every 6 months.
When the reminder is set, a message on the display prompts you to change it.

❑ The carbon filter can be disposed of with the regular household waste.

Note
FreshAir activated charcoal filters can be purchased from the Liebherr-Hausgeräte store at home.liebherr.com/shop/de/deu/zubehor.html.

9.1.1 Removing the FreshAir carbon filter

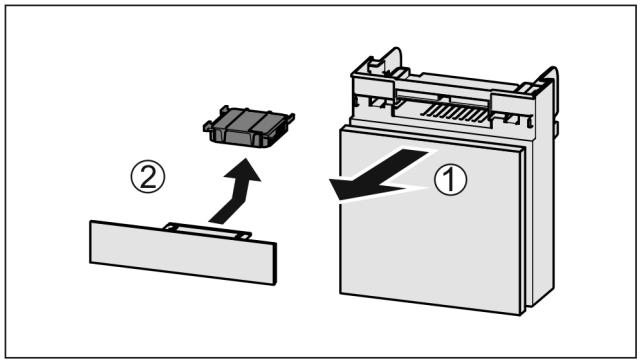

Fig. 200

- ▶ Pull out the compartment *Fig. 200 (1)*.
- ▶ Remove the carbon filter *Fig. 200 (2)*.

9.1.2 Inserting the FreshAir carbon filter

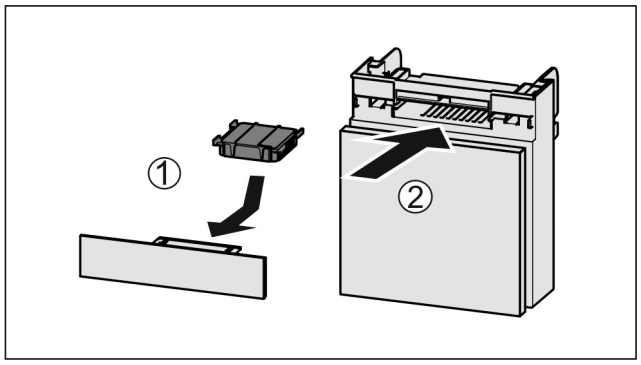

Fig. 201

- ▶ Insert the carbon filter as shown in the diagram *Fig. 201 (1)*.
- ▷ The carbon filter clicks into place.
  If the carbon filter is pointing downwards:
- ▶ Push the compartment in *Fig. 201 (2)*.
- ▷ The carbon filter is now ready for use.

9.2 Water tank*

The InfinitySpring water tank is located behind the bottom drawer in the fridge section.*

9.2.1 Removing the water tank

- ▶ Turn off the tap.
- ▶ Drain the InfinitySpring for 30 seconds and collect remaining water using a glass.*
- ▶ Remove the drawer compartment.
- ▶ Turn the water tank all the way anti-clockwise and pull it out.
- ▷ Water dripping out is collected in the drip tray.
- ▶ Empty out the water from the drip tray.*
- ▶ Clean the drip tray with a cloth or in the dishwasher.*

9.2.2 Inserting the water tank

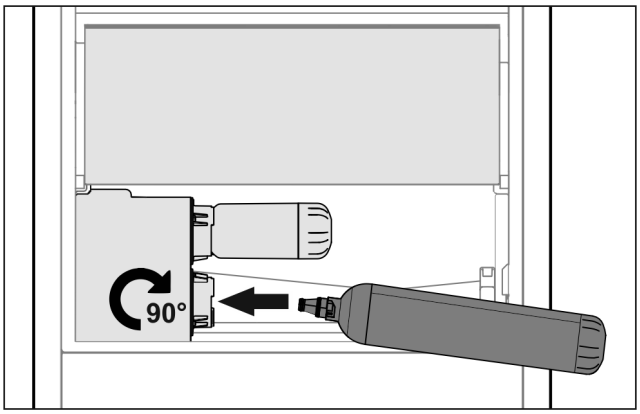

Fig. 202

- ▶ Remove the drawer compartment.
- ▶ Insert the water tank and rotate approx. 90° clockwise until it clicks in.
- ▶ Check that the tank is sealed and no water leaks out.
- ▶ Insert the drawer compartment.
- ▶ Turn on the tap.
- ▶ Bleed the water system. (see 4.2.1 Bleeding the water system) *

Instead of the water filter you can insert an additional water tank.*

Note
You can purchase this water tank as an optional extra.

9.2.3 Removing / inserting the drip tray*

You can remove the drip tray for cleaning.

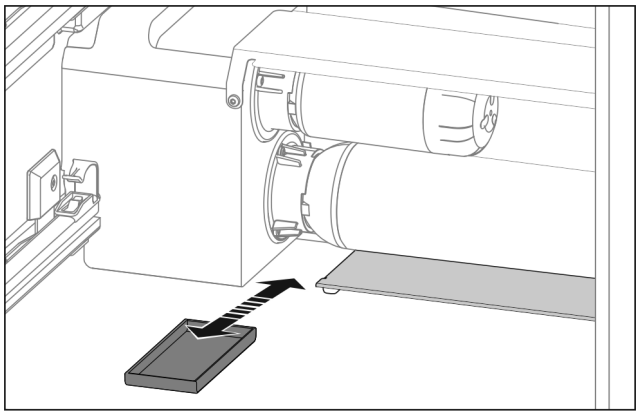

Fig. 203

- ▶ Pull out the drip tray to the front.

9.3 Water filter*

The water filter is located behind the lowest drawer in the fridge section.

It filters out deposits in the water and reduces the taste of chlorine.

- ❑ Replace the water filter at least every 6 months, or if there is a significant reduction in the flow rate.
- ❑ The water filter contains carbon and can be disposed of with the regular household waste.

Note
Water filters are available from the Liebherr-Hausgeräte store at home.liebherr.com/shop/de/deu/zubehor.html.

9.3.1 Removing the water filter

▶ Remove the drawer compartment.
▶ Turn the water filter all the way anti-clockwise and pull it out.
▷ Water dripping out is collected in the drip tray.
▶ Clean the drip tray with a cloth or in the dishwasher.*

9.3.2 Inserting the water filter

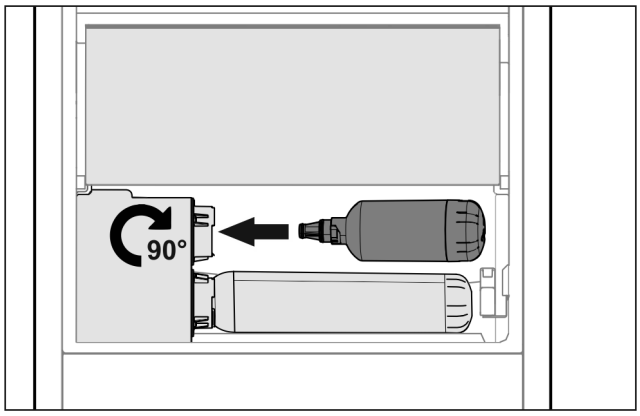

Fig. 204

▶ Remove the drawer compartment.
▶ Insert the water filter and rotate approx. 90° clockwise until it clicks in.
▶ Check that the filter is sealed and no water leaks out.
▶ Insert the drawer compartment.

CAUTION
Risk of infection due to potential particulate matter in new water filters!*
Nausea and vomiting.
▶ After replacing the filter: Draw and dispose of 3 l water at the InfinitySpring.

▷ The water filter is now ready for use.

9.4 Disassembling / assembling pull-out systems

9.4.1 Notes on disassembly

You can disassemble some of the pull-out systems for cleaning. Your appliance can contain a variety of pull-out systems.

The following pull-out systems can be disassembled or cannot be disassembled:

Pull-out system	can be disassembled / cannot be disassembled
Drawer on appliance base or glass shelf	cannot be disassembled
Fully extendible*	cannot be disassembled*
Fridge section partial pull-out*	cannot be disassembled*
Freezer section partial pull-out*	can be disassembled (see Partial pull-out freezer compartment*) *

9.4.2 Drawer on telescopic rails

Partial pull-out freezer compartment*

Disassembling pull-out system

Make sure the following prerequisites are met:
❑ Drawer has been removed.
❑ Glass shelf has been removed. (see 8.10 Glass shelves)

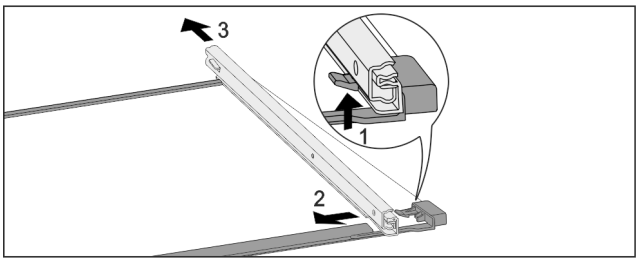

Fig. 205 Glass shelf with rails

▶ Push up front click-in hooks. *Fig. 205 (1)*
▶ Move the pull-out rails to the side *Fig. 205 (2)* and to the rear *Fig. 205 (3)*.

Installing pull-out system

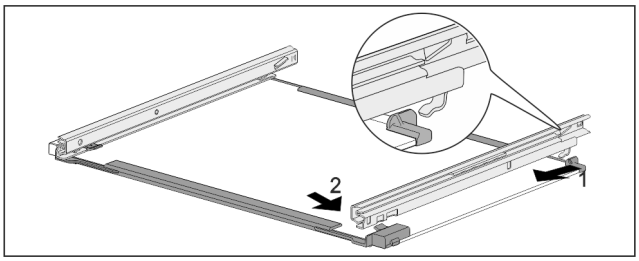

Fig. 206 Glass shelf with rails

▶ Hook in rail at the back. *Fig. 206 (1)*
▶ Hook in rail at the front. *Fig. 206 (2)*

9.5 Removing / inserting the variable bottle rack

The variable bottle rack can be removed for cleaning.

9.5.1 Removing the variable bottle rack

Ensure that the following requirements are met:
❑ Bottles have been removed.
❑ Glass shelf has been removed. (see 8.6.1 Using the variable bottle rack)

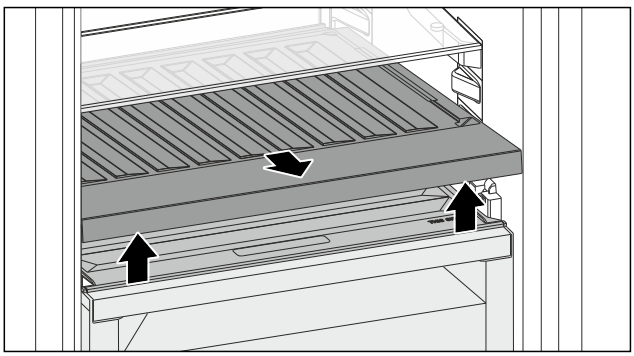

Fig. 207

▶ Lift the variable bottle rack at the front and pull it out.
▷ The compartment lid is visible.

Note
Liebherr recommends:
Do not place any items on the compartment lid below.

9.5.2 Inserting the variable bottle rack

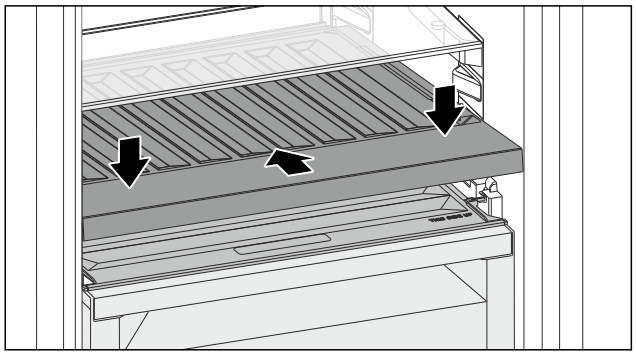

Fig. 208

▶ Push the variable bottle rack in to the end stop and press it down.
▷ The connectors at the back of the variable bottle rack are connected via automated processes.
▷ LED lights up.
▶ Insert the glass shelf. (see 8.6.2 Using the glass shelf)
-or-
▶ Use the variable bottle rack for bottles.

9.6 Compartment lid for Fruit & Vegetable Safe

You can remove the compartment lid for cleaning.

9.6.1 Removing the compartment lid

Ensure that the following requirements are met:

❑ The glass shelf directly above the variable bottle rack has been removed.
❑ The variable bottle rack has been removed.
❑ The drawer directly below the compartment lid has been removed. (see 8.7 Drawers)

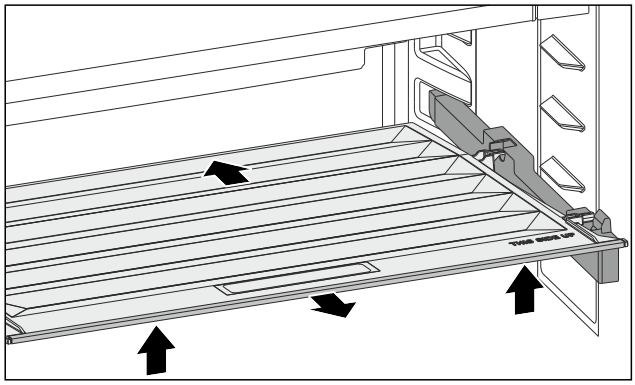

Fig. 209

▶ Push the compartment lid backwards.
▶ Lift the compartment lid forwards.
▶ Remove the compartment lid forwards and upwards at an angle.

9.6.2 Inserting the compartment lid

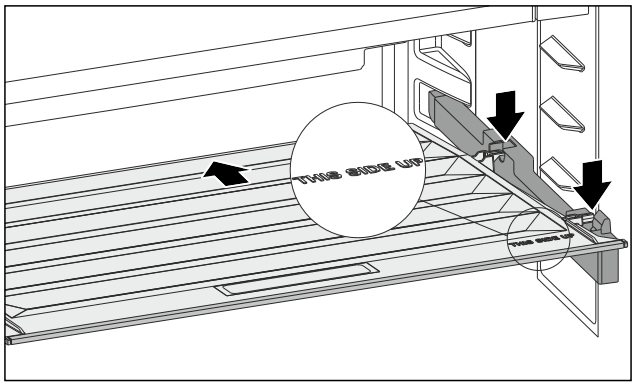

Fig. 210

If the THIS SIDE UP lettering is at the top:
▶ Insert the rear retaining parts into the relevant rear openings.
▶ Push the compartment lid backwards.
▶ Lower the compartment lid forwards and engage the front retaining parts into the openings.
▶ Move the compartment lid into the required position.

9.7 Defrosting the appliance

9.7.1 Defrosting the fridge compartment

Defrosting is performed automatically. The water from the thawing process drains through the outlet and evaporates.
▶ Clean the drain opening at regular intervals. (see 9.8 Cleaning the appliance)

9.7.2 Defrosting the freezer compartment with NoFrost

Defrosting is performed automatically with the NoFrost system. The moisture is deposited on the evaporator, is periodically defrosted and evaporates.

The appliance does not have to be defrosted.

9.8 Cleaning the appliance

9.8.1 Ready

WARNING
Danger of electric shock!
▶ Remove the refrigerator connector or interrupt the power supply.

WARNING
Risk of fire
▶ Do not damage the refrigeration circuit.

▶ Empty the appliance.
▶ Remove mains connector.
-or-
▶ Activate CleaningMode. (see CleaningMode)

9.8.2 Clean the housing

NOTICE
Improper cleaning!
Damage to the appliance.
▶ Only use soft cleaning cloths and ph-neutral all-purpose cleaners.
▶ Do not uses abrasive sponges or steel wool which may cause scratches.
▶ Do not use any sharp or abrasive cleaning agents, nor any that contain sand, chloride or acid.

WARNING
Risk of injury and damage as a result of hot steam!
Hot steam can lead to burns and can damage the surfaces.
▶ Do not use any steam cleaners!

▶ Wipe the housing down with soft, clean cloth. If very dirty, use lukewarm water with a neutral cleaner. Glass surfaces can also be cleaned with glass cleaner.

9.8.3 Cleaning the interior

NOTICE
Improper cleaning!
Damage to the appliance.
▶ Only use soft cleaning cloths and ph-neutral all-purpose cleaners.
▶ Do not uses abrasive sponges or steel wool which may cause scratches.
▶ Do not use any sharp or abrasive cleaning agents, nor any that contain sand, chloride or acid.

▶ Plastic surfaces: clean by hand with a soft clean cloth, lukewarm water and a little detergent.
▶ Metal surfaces: clean by hand with a soft clean cloth, lukewarm water and a little detergent.
▶ Drain hole: remove deposits using a thin item (for example a cotton bud).

9.8.4 Clean the components

NOTICE
Improper cleaning!
Damage to the appliance.
▶ Only use soft cleaning cloths and ph-neutral all-purpose cleaners.
▶ Do not uses abrasive sponges or steel wool which may cause scratches.
▶ Do not use any sharp or abrasive cleaning agents, nor any that contain sand, chloride or acid.

Clean with a soft, clean cloth, lukewarm water and some detergent:

- Door rack*
- Dividing shelf
- VarioSafe*
- Compartment lid for Fruit & Vegetable Safe
- Drawer
  Please note: Do not remove the magnet on the drawer. The magnet ensures the functionality of the IceMaker.*
- Flexible ice compartment divider in the IceMaker's ice cube drawer*
- Adjustable bottle shelf
- FlexSystem*
- Components of the EasyTwist-Ice*

Clean with a damp cloth:

- Retractable rails
  Please note: The grease in the tracks is used for lubrication and must not be removed!

Wash in the dishwasher up to 60 °C:

- Door rack*
- VarioBox*
- Bottle rack*
- Holder of the dividing shelf
- HydroBreeze water tank and water tank lid*
- Drip tray*
- Egg rack*
- Butter dish*
- Ice cube tray*
- Ice cube scoop*
- FlexCube*

▶ To disassemble components: see the relevant section.
▶ Clean the components.

9.8.5 Cleaning the InfinitySpring *

You can clean the InfinitySpring outlet and around it without disconnecting the appliance from the mains.

Cleaning is required in the following cases:

❑ Initial operation
❑ If out of use for more than 5 days.

▶ Press the bottom pushbutton of the dispenser.
▷ The outlet unit moves out.
▶ Clean the water outlet and around it with a soft, clean cloth, lukewarm water and some detergent.
▶ Release the bottom pushbutton.
▶ Draw and dispose of 2 l water at the InfinitySpring.

9.8.6 Cleaning the HydroBreeze*

Cleaning is required in the following cases:

❑ Initial operation
❑ HydroBreeze is off for more than 48 hours.
❑ Refill the water tank.

Ensure that the following conditions are met:

❑ HydroBreeze is off (see HydroBreeze*) .
❑ Water tank has been removed and cleaned in the dishwasher.

▶ Wipe out the recess with a damp cloth.
▶ Insert the water tank.
▶ Activate the HydroBreeze.

9.8.7 Cleaning the EasyTwist-Ice*

Clean the EasyTwist-Ice in the following situations:

- First use
- Not using for more than 48 hours
- When cleaning is required

Dismantling the EasyTwist-Ice

Make sure that the following requirements are fulfilled:

❑ The drawer has been removed. (see 8.7 Drawers)
❑ The drawer is placed on a table.

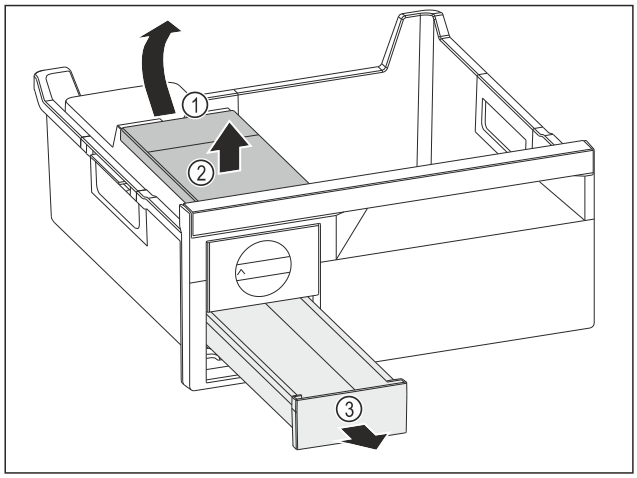

Fig. 211

- ▶ Removing the water tank: Lift the water tank by the recess *Fig. 211 (1)*.
- ▶ Remove the water tank *Fig. 211 (2)* upwards.
- ▶ Remove the ice cube drawer *Fig. 211 (3)* to the front.

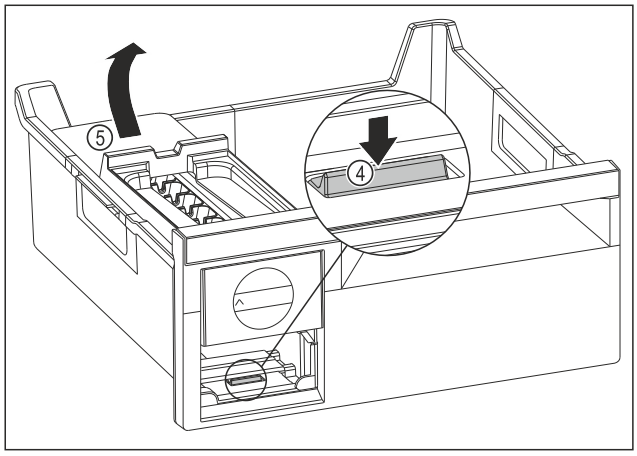

Fig. 212

- ▶ Removing the EasyTwist-Ice body: Use your finger to push the tab *Fig. 212 (4)* down and use your other hand to lift the EasyTwist-Ice body *Fig. 212 (5)* from behind at the same time.
- ▶ Remove the EasyTwist-Ice body from the freezer drawer.

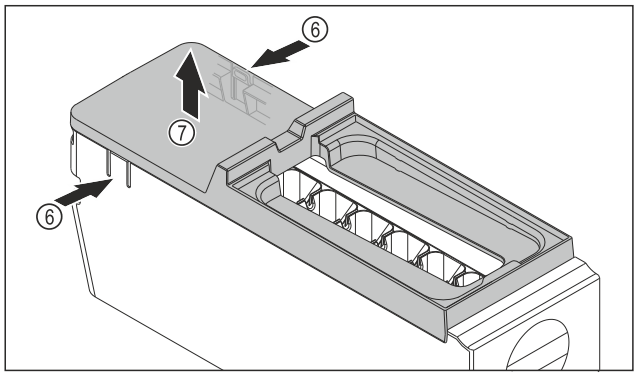

Fig. 213

- ▶ Removing the EasyTwist-Ice body cover: Push the tabs *Fig. 213 (6)* on both sides of the EasyTwist-Ice body with one hand.
- ▶ Use the other hand to remove the cover *Fig. 213 (7)* upwards.
- ▷ EasyTwist-Ice is dismantled into four parts. (see Fig. 214)

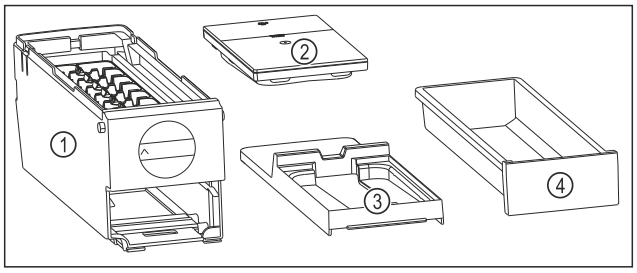

Fig. 214 Components of the EasyTwist-Ice

(1) EasyTwist-Ice body with ice cube tray
(2) Water tank
(3) Cover
(4) Ice cube drawer

NOTICE

Risk of damage due to improper dismantling!

Equipment breaking, jumping and cracking. If you dismantle the EasyTwist-Ice body further, you may damage the rotary knob or other parts of the EasyTwist-Ice body.

- ▶ Only dismantle the EasyTwist-Ice into the components shown. (see Fig. 214)
- ▶ Clean the EasyTwist-Ice body *Fig. 214 (1)* as a whole.

Cleaning the EasyTwist-Ice

Make sure that the following requirements are fulfilled:

- ❑ The EasyTwist-Ice is dismantled. (see Dismantling the EasyTwist-Ice)

- ▶ Clean the ice cube drawer, water tank, cover and Easy-Twist-Ice body with warm water and a little detergent.
- ▶ Dry all cleaned components thoroughly with a dry cloth.
- ▷ The EasyTwist-Ice is clean.

Installing the EasyTwist-Ice

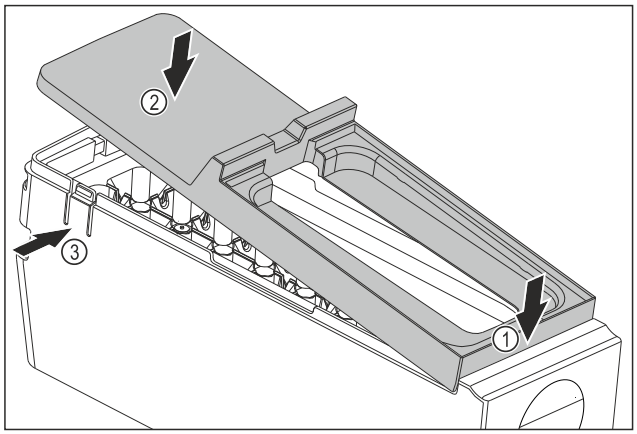

Fig. 215

- ▶ Installing the EasyTwist-Ice body cover: Place the cover on the front. *Fig. 215 (1)*
- ▶ Lower the cover at the rear. *Fig. 215 (2)*
- ▷ The cover locks into both tabs *Fig. 215 (3)* audibly.

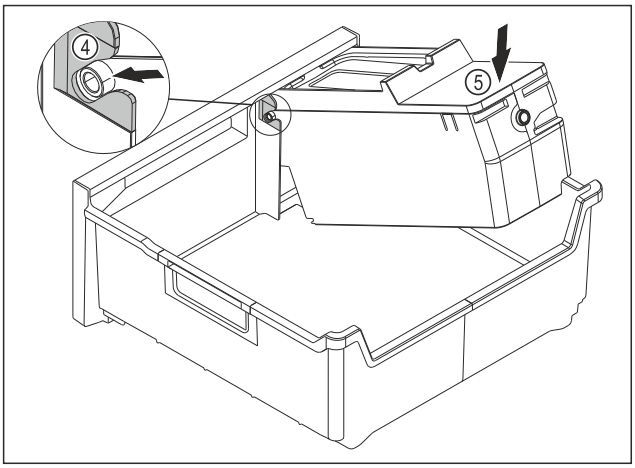

Fig. 216

▶ Installing the EasyTwist-Ice body: Push the axes for the EasyTwist-Ice body into the guides *Fig. 216 (4)*.
▶ Press the EasyTwist-Ice body *Fig. 216 (5)* down at the back.
▷ The EasyTwist-Ice body locks in audibly.

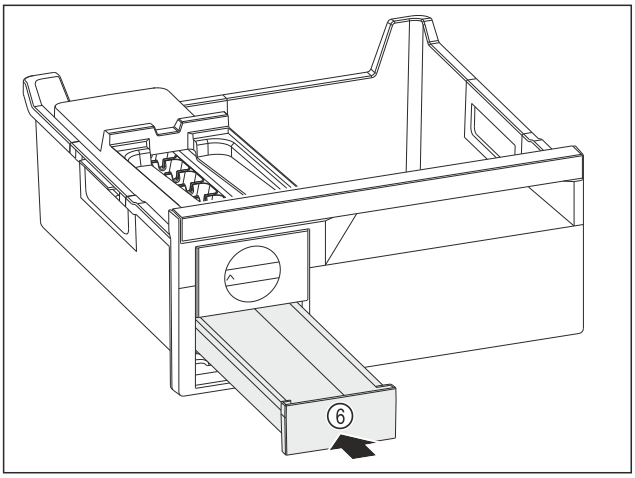

Fig. 217

▶ Insert the ice cube drawer *Fig. 217 (6)*.

WARNING
Risk of poisoning due to contaminated water!
▶ Only fill the water tank with potable water.

▶ Fill the water tank with water.
▶ Insert the water tank.
▶ Insert the drawer. (see 8.7 Drawers)
If you are using unfiltered water:
▶ Dispose of ice cubes that were produced 24 hours after initial ice cube production.
-or-
If you are using filtered water:
▶ Dispose of ice cubes that were produced 48 hours after initial ice cube production.

9.8.8 Cleaning the IceMaker*

There are various options for cleaning the IceMaker.

Cleaning is required in the following cases:
❑ Initial operation
❑ With mains connection:*
If out of use for more than 5 days.*

Ensure that the following conditions are met:
❑ IceMaker drawer is emptied.
❑ IceMaker drawer is in place.
❑ The IceMaker is activated.

First use or after a long period of non-use

Clean the IceMaker with the TubeClean function.
▶ Put an empty 1.5 l vessel (max. height 10 cm) in the drawer under the IceMaker.
▶ Activate the TubeClean function.
▷ The rinse process is prepared (max. 60 min.): Symbol flashes.
▷ Water pipes are rinsed: Symbol flashes.
▷ Rinsing process is complete: Function turns off automatically.
▶ Remove the IceMaker drawer and remove the container.
▶ Clean the IceMaker drawer with warm water and a little detergent.
▶ Push the IceMaker drawer in.
▷ The system starts making ice cubes automatically.

Without a water filter*
▶ Dispose of any ice cubes that were made 24 hours after the first ice cubes.*

With a water filter:*
▶ Dispose of any ice cubes that were made 48 hours after the first ice cubes.*
-or-
▶ Draw 2 l of water from the InfinitySpring and dispose of it.*

If cleaning is required

Clean the IceMaker by hand.
▶ Remove the IceMaker drawer and clean with warm water and a little detergent.
▶ Push the IceMaker drawer in.
▷ The system starts making ice cubes automatically.

9.8.9 After cleaning

▶ Wipe the appliance and the components dry.
▶ Connect and switch on the appliance.
▶ Activate SuperFrost (see 7.2 Appliance functions) .
The temperature is cold enough:
▶ Place the food inside.
▶ Repeat cleaning regularly.

10 Customer help

10.1 Technical specifications

Temperature range	
Cooling	3 °C to 9 °C
BioFresh	0 °C to 3 °C
Fish & SeaFood*	-2 °C to 0 °C* Possible settings :* 0 °C | 0 °C* -2 °C | 0 °C* -2 °C | -2 °C*
Freeze	-26 °C to -15 °C

Maximum ice cube quantity / 24 hours	
Freezer compartment	see type plate under “Freezing capacity .../ 24 h”

Maximum loading weight for the equipment			
Equipment	Appliance width 600 mm (see installation instructions, device dimensions)	Appliance width 700 mm (see installation instructions, device dimensions)	Appliance width 750 mm (see installation instructions, device dimensions)
Drawer on glass shelf (see 8.7.1 Drawer on appliance base or glass shelf)	15 kg	--	23 kg
Freezer section partial pull-out* (see 8.7.2 Drawer on telescopic rails) *	15 kg*	22 kg*	22 kg*

Ice cube production with IceMaker*	
Ice cube production / 24 hours	At a temperature of -18 °C: 1.2 kg of ice cubes
maximum ice cube production / 24 hours	With the MaxIce function on: 1.5 kg of ice cubes

Ice cube production with EasyTwist-Ice*	
Time required at -18 °C	approx. 5.5 hours
Time required with SuperFrost activated	approx. 3 hours

Time required to reach various temperatures with VarioTemp*		
Initial temperature*	Target temperature*	Time taken to reach target temperature*
-18 °C	0 °C	> 8 hours
-18 °C	8 °C	> 12 hours
8 °C	14 °C	> 6 hours
14 °C	-18 °C	> 4 hours

Lighting	
Class[1]	Light source
This product contains one or more energy efficiency class G light sources.	LED

[1] *The appliance may contain light sources with different energy efficiency classes. The lowest energy efficiency class is indicated.*

For appliances with a WiFi connection:

Frequency specification	
Frequency band	2.4 GHz
Maximum radiated power	< 100 mW

Frequency specification	
Purpose of the wireless equipment	Integration in the local WiFi network for data communication

10.2 Operating noises

The appliance makes different noises when it is on.

- At **higher temperatures** the appliance uses less energy but works for longer. It is **quieter**.
- At **lower temperatures** the food is cooled faster. It is **louder**.

Examples:

- Functions on (see 7.2 Appliance functions)
- Fan running
- Food recently added
- High ambient temperature
- Door open for a while

Noise	Possible cause	Type of noise
Bubbling and splashing	Coolant flowing into the cooling circuit.	Normal operating noise
Hissing	Coolant sprays into the cooling circuit.	Normal operating noise
Humming	The appliance is cooling. The volume depends on the cooling output.	Normal operating noise
Suction noises	Soft-closing door is being opened and closed.	Normal operating noise
Humming and rustling	The fan is running.	Normal operating noise
Clicking	Components are switched on and off.	Normal switching noise
Rattling or humming	Valves or flaps are working.	Normal switching noise

Noise	Possible cause	Type of noise	Lifting
Vibration	Improper setup	Defective noise	Level the appliance using the adjustable feet.
Rattling	Components, items inside the appliance	Defective noise	Secure components. Leave enough space between the items.

10.3 Technical fault

Your appliance is designed and built to ensure it works reliably and has a long service life. In the unlikely event that a fault occurs during operation, please check whether it is

due to an operating error. If so, you will be charged for the callout and repair costs even if it falls within the warranty period.

You can fix the following faults yourself.

10.3.1 Appliance function

Defect	Cause	Remedy
The appliance is not working.	→ The appliance is not switched on.	▶ Switch the appliance on.
	→ The power plug is not properly plugged into the socket.	▶ Check the power plug.
	→ There is something wrong with the power outlet fuse.	▶ Check the fuse.
	→ Power cut	▶ Keep the appliance closed. ▶ Safeguarding food: Place cold packs on top of food or use another freezer if the power cut lasts longer. ▶ Do not re-freeze defrosted food,
	→ The IEC socket is not plugged into the appliance correctly.	▶ Check the IEC socket.
Temperature is not cold enough.	→ The appliance door is not closed properly.	▶ Close the appliance door.
	→ The ambient temperature is too high.	▶ Problem solution: (see 1.4 Appliance range of use)
	→ The appliance was opened too many times or for too long.	▶ Wait to see if the required temperature corrects itself. If not, contact Customer Service. (see 10.4 Customer Service)
	→ Too much fresh food was placed inside without SuperFrost.	▶ Solution: (see SuperFrost)
	→ The temperature is set incorrectly.	▶ Turn down the temperature and check after 24 hours.
	→ The appliance is too close to a heat source (oven, radiator, etc).	▶ Move the appliance or the heat source.
The door seal is defective or needs to be replaced for another reason.	→ The door seal can be replaced. It can be replaced without the need for special tools.	▶ Contact Customer Service. (see 10.4 Customer Service)
The appliance builds up too much ice or condensation.	→ The door seal may have slipped out of its groove.	▶ Check that the door seal is well fitted in the groove.
The exterior surfaces of the appliance are warm.*	→ The heat of the refrigeration circuit is used to avoid condensation.	▶ This is normal.

10.3.2 Features

Defect	Cause	Remedy
You cannot activate the IceMaker.*	→ The appliance and therefore the IceMaker are not connected.	▶ Connect the appliance (see the Installation Guide).
The IceMaker is not producing ice cubes.*	→ The IceMaker is not on.	▶ Activate the IceMaker.
	→ The drawer of the IceMakers is not connected properly.	▶ Push the drawer in correctly.
	→ The water connection is not open.	▶ Open the water connection.*
The InfinitySpring is not working.*	→ Ice cube tray rotates.	▶ Try again after 1 minute.*
	→ There is air in the water system.	▶ Bleed the water system. (see 4.2 Putting InfinitySpring into operation*)

Defect	Cause	Remedy
	→ The water connection is not open.	▶ Open the water connection.
The water flow through the InfinitySpring is irregular.*	→ The aerator is dirty.	▶ Replace aerator. Contact Customer Service. (see 10.4 Customer Service)
HydroBreeze is not keeping refrigerated goods moist.*	→ The HydroBreeze is not on.	▶ Activate the HydroBreeze.
	→ There is not enough water in the water tank.	▶ Fill the water tank.
	→ There is dirt in front of the concentrator.	▶ Clean the HydroBreeze.
	→ The water tank is not clicked into place properly.	▶ Click the water tank into place.
	→ The compartment cover of the Fruit & Vegetable Safe is set to “low humidity”.	▶ The compartment cover of the Fruit & Vegetable Safe is set to “high humidity”.
The internal light does not come on.	→ The appliance is not switched on.	▶ Switch the appliance on.
	→ The door was open for longer than 15 minutes.	▶ Interior lighting switches off automatically after about 15 minutes when the door is open.
	→ The LED interior light is faulty or the lid is damaged.	▶ Contact Customer Service. (see 10.4 Customer Service)

10.4 Customer Service

First check whether you can rectify the fault yourself (see 10 Customer help) . If you cannot rectify the problem, contact Customer Service.

You can find the address in the enclosed brochure “Liebherr-Service” or at home.liebherr.com/service.

WARNING
Unprofessional repair!
Injuries.
- ▶ Have any repairs and action - not expressly specified - on the appliance and mains cable carried out by service personnel only. (see 9 Maintenance)
- ▶ A damaged mains cable may only be replaced by the manufacturer, the manufacturer’s Customer Service or a similarly qualified person.
- ▶ In the case of appliances with an IEC connector, the change may be made by the customer.

10.4.1 Contacting Customer Service

Make sure that the following appliance information is available:

- ❑ Appliance name (model and index)
- ❑ Service no. (Service)
- ❑ Serial no. (S no.)

▶ Call up the appliance information via the display. (see Device information)

-or-

▶ Refer to the type plate for appliance information. (see 10.5 Model plate)

▶ Note down the appliance information.
▶ Notify customer service: Report errors and the appliance information.
▷ This will help us to provide you with a faster, more accurate service.
▶ Follow further instructions from Customer Service.

10.5 Model plate

The model plate is behind the drawers on the inside of the appliance.

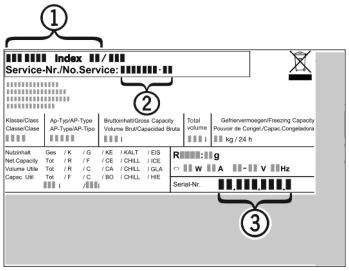

Fig. 218

(1) Appliance description **(3)** Serial no.
(2) Service no.

▶ Note the data on the model plate.

11 Shutting down

▶ Empty the appliance.
▶ Deactivate IceMaker. (see Deactivating the IceMaker and MaxIce) *
▶ Deactivate HydroBreeze. (see Deactivating HydroBreeze) *
▶ Switch off appliance. (see Switching the appliance off and on)
▶ Pull the mains plug out of the socket.
▶ Remove the IEC socket if required: Pull the IEC socket out of the appliance plug and move it to the left and right at the same time.
▶ Clean appliance. (see 9.8 Cleaning the appliance)
▶ Leave the door open, so that no unpleasant odours arise.

12 Disposal

12.1 Preparing appliance for disposal



Liebherr uses batteries in some of its appliances. In the EU, for environmental reasons, legislation obliges the end user to remove these batteries before disposing of old appliances. If your appliance contains batteries, a corresponding notice is attached.

Lamps — If you can remove the lamps yourself without destroying them, also remove these before disposal.

- ▶ Take the appliance out of operation.
- ▶ If possible: remove lamps without destroying them.

12.2 Disposing of the appliance in an environmentally friendly manner



The appliance still contains valuable materials and must be disposed of separately from unsorted municipal waste.





Dispose of batteries separately from the old appliance. To do this, you can return the batteries free of charge to retailers as well as recycling centres and collection centres for recyclable materials.

Lamps — Dispose of removed lamps via the respective collection systems.

For Germany: — You can dispose of the appliance free of charge via the class 1 collection containers at the local recycling and recyclable material collection centres. When purchasing a new fridge/freezer, if the sales area > 400 m^2, retailers will also take back the old appliance free of charge.

WARNING
Leaking coolant and oil!
Fire. The coolant contained in the appliance is eco-friendly, but also flammable. The oil contained in the appliance is flammable. Escaping coolant and oil can ignite if the concentration is high enough and in contact with an external heat source.
- ▶ Do not damage the pipelines of the coolant circuit and the compressor.

- ▶ Observe the notes on transporting the appliance.
- ▶ Transport the appliance without damaging it.
- ▶ Dispose of batteries, lamps and the appliance according to the above specifications.



home.liebherr.com/fridge-manuals

EN fridge/freezer with BioFresh

Issue date: 20250514

Part number index: 7083574-00

Liebherr-Hausgeräte Marica EOOD
Bezirk Plovdiv
4202 Radinovo
Bulgarien

tehnoteka

https://tehnoteka.rs

Ovaj dokument je originalno proizveden i objavljen od strane proizvođača, brenda Liebherr, i preuzet je sa njihove zvanične stranice. S obzirom na ovu činjenicu, Tehnoteka ističe da ne preuzima odgovornost za tačnost, celovitost ili pouzdanost informacija, podataka, mišljenja, saveta ili izjava sadržanih u ovom dokumentu.

Napominjemo da Tehnoteka nema ovlašćenje da izvrši bilo kakve izmene ili dopune na ovom dokumentu, stoga nismo odgovorni za eventualne greške, propuste ili netačnosti koje se mogu naći unutar njega. Tehnoteka ne odgovara za štetu nanesenu korisnicima pri upotrebi netačnih podataka. Ukoliko imate dodatna pitanja o proizvodu, ljubazno vas molimo da kontaktirate direktno proizvođača kako biste dobili sve detaljne informacije.

Za najnovije informacije o ceni, dostupnim akcijama i tehničkim karakteristikama proizvoda koji se pominje u ovom dokumentu, molimo posetite našu stranicu klikom na sledeći link:

https://tehnoteka.rs/p/liebherr-kombinovani-frizider-cbnsdc-573i-plus-akcija-cena/