tehnoteka

https://tehnoteka.rs

Uputstvo za upotrebu (EN)

NZXT F120 RGB Core RF-C12SF-B1 ventilator za PC

NZXT



Tehnoteka je online destinacija za upoređivanje cena i karakteristika bele tehnike, potrošačke elektronike i IT uređaja kod trgovinskih lanaca i internet prodavnica u Srbiji. Naša stranica vam omogućava da istražite najnovije informacije, detaljne karakteristike i konkurentne cene proizvoda.

Posetite nas i uživajte u ekskluzivnom iskustvu pametne kupovine klikom na link:

https://tehnoteka.rs/p/nzxt-f120-rgb-core-rf-c12sf-b1-ventilator-za-pc-akcija-cena/

NZXT

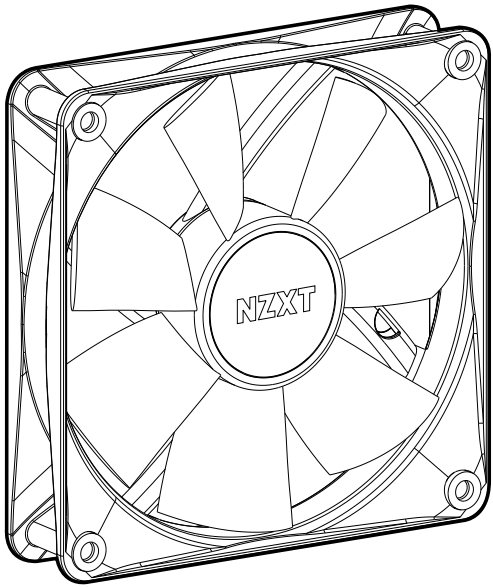

F RGB CORE FAN

120MM | 140MM | HUB-MOUNTED RGB LEDS FAN

NZXT CAM

TABLE OF CONTENTS

VERSION 1.1, 2023/03/20

COMPONENT LIST 01

HARDWARE INTRODUCTION 03

INSTALLATION 05

SOFTWARE SETUP 09

NZXT GLOBAL WARRANTY POLICY 10

REGULATORY STATEMENT 12

产品中有毒有害物质或元素的名称及含量标识表 | 限用物質及元素清單 14

SUPPORT AND SERVICE 15

COMPONENT LIST

LISTA DE COMPONENTES
LISTE DES COMPOSANTS
KOMPONENTENLISTE
ELENCO DEI COMPONENTI
LISTA DE COMPONENTES
구성품 목록
部品リスト
零件表
零件表

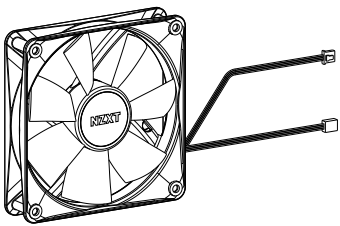

A F RGB Core Fan

Single Pack x1
120 mm Triple Pack x3
140 mm Twin Pack x2

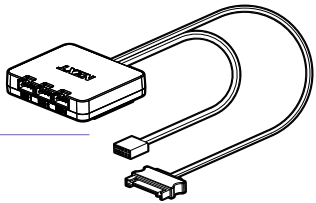

B RGB Lighting Controller

Single Pack x0
120 mm Triple Pack x1
140 mm Twin Pack x1



C M5 Screw

Single Pack x4
120 mm Triple Pack x12
140 mm Twin Pack x8



D 3M Dual Lock

Single Pack x0
120 mm Triple Pack x2
140 mm Twin Pack x2

A

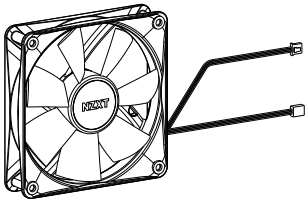

B

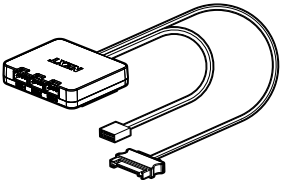

C



D



A . Ventilador Serie F RGB Core
B . Controlador de iluminación RGB
C . Tornillo M5
D . 3M Dual Lock

A . Ventilateur Série F RGB Core
B . Commande de l'éclairage RGB
C . Vis M5
D . 3M Dual Lock

A . F-Serie RGB Core Lüfter
B . RGB-Beleuchtungssteuerung
C . M5-Schraube
D . 3M Dual-Lock-Band

A . Ventola Serie F RGB Core
B . Controller illuminazione RGB
C . Vite M5
D . 3M Dual Lock

A . Ventoinha RGB Core Serie F
B . Controlador de iluminação RGB
C . Parafuso M5
D . 3M Dual Lock

A . F 시리즈 RGB CORE 팬
B . RGB 조명 컨트롤러
C . M5 스크류
D . 3M 듀얼 락

A . Fシリーズ RGB CORE ファン
B . RGB照明コントローラ
C . M5ネジ
D . 3Mデュアルロック

A . F RGB CORE 风扇
B . RGB 灯光控制器
C . M5 螺丝
D . 3M魔术贴

A . F RGB CORE 風扇
B . RGB 燈光控制器
C . M5 螺絲
D . 3M 魔鬼氈

HARDWARE INTRODUCTION

INTRODUCCIÓN DE HARDWARE
DESCRIPTION DU MATÉRIEL
VORSTELLUNG DER HARDWARE
PRESENTAZIONE DELL'HARDWARE
INTRODUÇÃO AO HARDWARE
하드웨어 설명
ハードウェアの概要
硬件介紹
硬體介紹

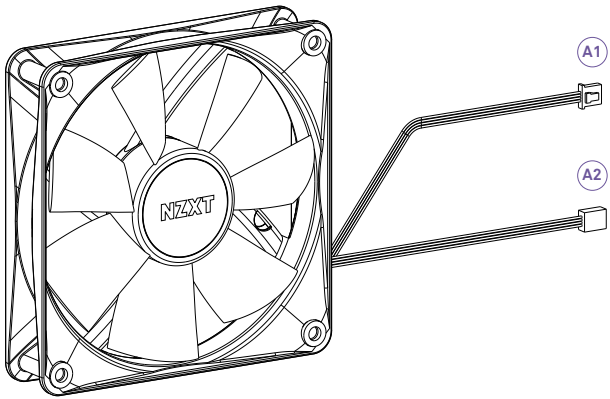

A F RGB Core Fan
Ventilador Serie F RGB Core
Ventilateur Série F RGB Core
F-Serie RGB Core Lüfter
Ventola Serie F RGB Core
Ventoinha RGB Core Serie F
F 시리즈 RGB CORE 팬
Fシリーズ RGB CORE ファン
F RGB CORE 风扇
F RGB CORE 風扇

A1 4-pin NZXT RGB Cable
4-pin PWM Fan Cable
Câble RGB NZXT à 4 broches
4-poliges NZXT-RGB-Kabel
Cavo a 4 pin per RGB NZXT
Cabo RGB NZXT de 4 pinos
4핀 NZXT RGB 케이블
4ピンNZXT RGBケーブル
4 针 NZXT RGB 电缆
4 針 NZXT RGB 電纜

A2 4-pin PWM Fan Cable
Cable de ventilador PWM de 4 pines
Câble de ventilateur à modulation de largeur d'impulsions à 4 broches
4-poliges PWM-Lüfterkabel
Cavo della ventola PWM a 4 pin
Cabo de ventoinha PWM de 4 pinos
4핀 NZXT RGB 케이블
4ピンPWMファンケーブル
4 针 PWM 风扇电缆
4 針 PWM 風扇電纜

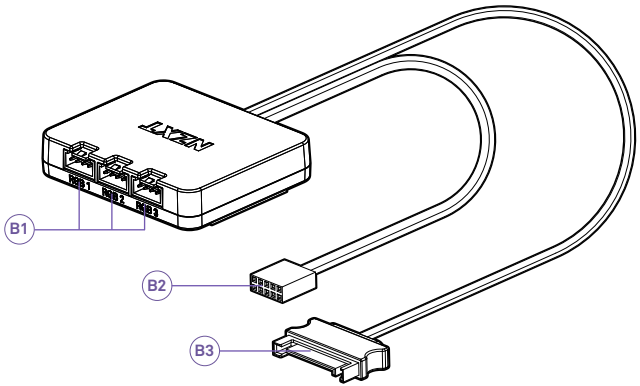

B RGB Lighting Controller
Controlador de iluminación RGB
Commande de l'éclairage RGB
RGB-Beleuchtungssteuerung
Controller illuminazione RGB
Controlador de iluminação RGB
RGB 조명 컨트롤러
RGB照明コントローラ
RGB 灯光控制器
RGB 灯光控制器

B1 Lighting Channels x3
Canales de iluminación x3
Canaux d'éclairage x3
Beleuchtungskanäle x3
Canali di illuminazione x3
Canais de iluminação x3
조명 채널 3개
照明チャネル x3
灯光通道 x3
燈光通道 x3

B2 Internal USB Cable x1
Cable USB interno x1
Câble USB interne x1
Internes USB-Kabel x1
Cavo USB interno x1
Cabo USB interno x1
내부 USB 케이블 1개
内部USBケーブル x1
内部 USB 电缆 x1
內部 USB 電纜 x1

B3 SATA Power Cable x1
Cable de alimentación SATA x1
Câble d'alimentation SATA x1
SATA-Stromkabel – x1
Cavo USB interno x1
Cabo de alimentação SATA x1
SATA 전원 케이블 1개
SATA 電源ケーブル x1
SATA 电源线 x1
SATA 電源線 x1

INSTALLATION

INSTALACIÓN
INSTALLATION
INSTALLIEREN
INSTALLAZIONE
INSTALAÇÃO

설치
取り付け
安装
安裝

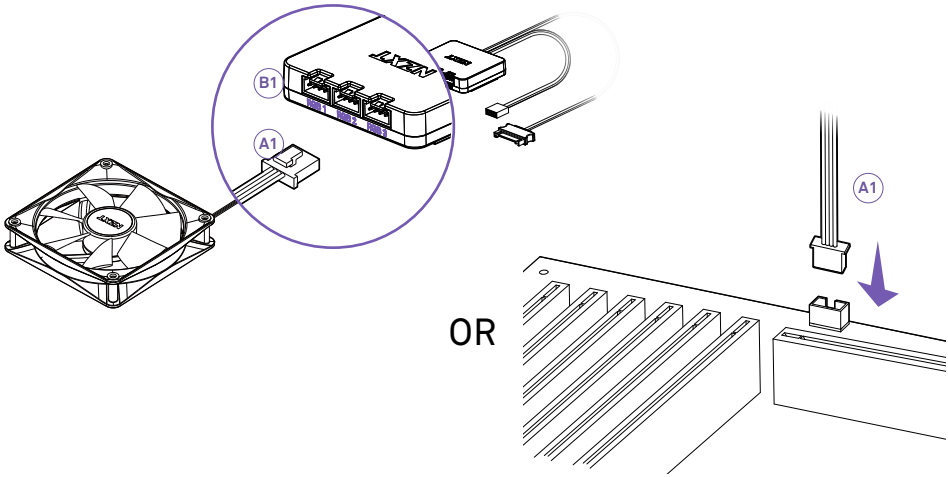

STEP 1

Connect the fan 4-pin NZXT RGB cable to an NZXT RGB lighting channel on your lighting controller or motherboard.
Raccorde le câble RGB NZXT à 4 broches du ventilateur à un canal d'éclairage RGB NZXT de ta commande d'éclairage ou de ta carte mère.
Branchez le câble RGB NZXT à 4 broches du ventilateur à un canal d'éclairage RGB NZXT sur votre contrôleur d'éclairage RGB ou votre carte mère.
Verbinde das 4-polige NZXT-RGB-Kabel des Lüfters mit einem NZXT-RGB-Beleuchtungskanal auf der Beleuchtungssteuerung oder dem Motherboard.
Collegare il cavo a 4 pin per la ventola RGB NZXT a un canale di illuminazione RGB NZXT del controller illuminazione o della scheda madre.
Ligue o cabo RGB NZXT de 4 pinos da ventoinha a um canal de iluminação RGB NZXT no seu controlador de iluminação ou na motherboard.
팬 4핀 NZXT RGB 케이블을 조명 컨트롤러 또는 마더보드의 NZXT RGB 조명 채널에 연결합니다.
4ピンNZXT RGBケーブルを、照明コントローラまたはマザーボードのNZXT RGB照明チャネルに接続します。
将风扇的 4 针 NZXT RGB 电缆连接到灯光控制器或主板上的 NZXT RGB 灯光通道。
將風扇的 4 針 NZXT RGB 電纜連接到燈光控制器或主板上的 NZXT RGB 燈光通道。

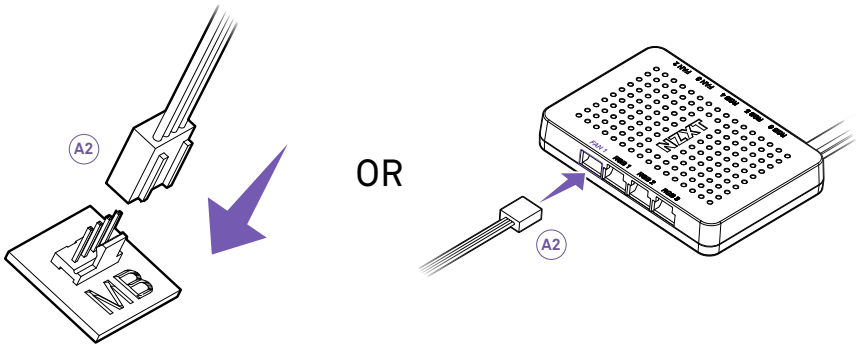

STEP 2

Connect the 4-pin PWM fan cable to an open header on your motherboard or fan controller.
Branche le câble du ventilateur à modulation de largeur d'impulsions à 4 broches sur un connecteur ouvert de ta carte mère ou de ta commande de ventilateur.
Branchez le câble du ventilateur MLI à 4 broches à un connecteur ouvert sur votre commande de ventilateur ou votre carte mère.
Verbinde des 4-polige PWM-Lüfterkabel mit einem offenen Header an deinem Motherboard oder deiner Lüftersteuerung.
Connettere il cavo della ventola PWM a 4 pin a un connettore aperto della scheda madre o del controller ventole.
Ligue o cabo de ventoinha PWM de 4 pinos a um conector disponível na sua motherboard ou no controlador da ventoinha.
4핀 PWM 팬 케이블을 마더보드 또는 팬 컨트롤러에 있는 개방형 헤더에 연결합니다.
4ピンPVMファンケーブルをマザーボードまたはファンコントローラの空きヘッダーに接続します。
将 4 针 PWM 风扇电缆连接至主板或风扇控制器上的开放式接头。
將 4 針 PWM 風扇電纜連接至主板或風扇控制器上的開放式接頭。

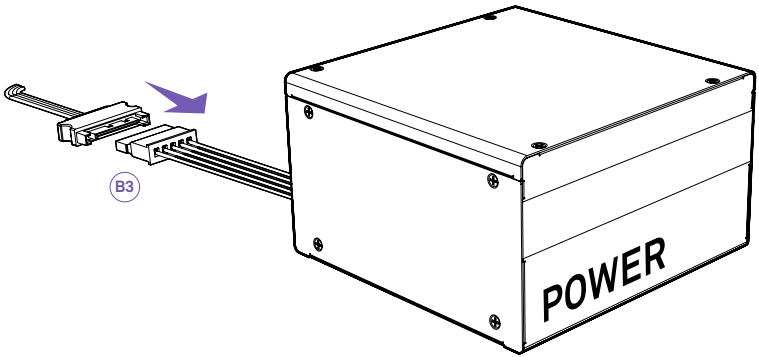

STEP 1

Make sure your PC is turned off. Connect the controller SATA power cable to the power connector.
Asegúrate de que el PC esté apagado. Conecta el cable de alimentación SATA del controlador al conector de alimentación.
Assure-toi que ton PC est éteint. Branche le câble d'alimentation SATA de la commande au connecteur d'alimentation.
Vergewissern Sie sich, dass der PC ausgeschaltet ist. Schließen Sie das SATA-Stromkabel der Steuerung an den Stromanschluss an.
Accertarsi che il PC sia spento. Collegare il cavo di alimentazione SATA al rispettivo connettore.
Certifique-se de que o seu PC está desligado. Ligue o cabo de alimentação SATA do controlador ao conector de alimentação.
PC가 꺼졌는지 확인합니다. 컨트롤러 SATA 전원 케이블을 전원 커넥터에 연결합니다.
PCがオフになっていることを確認してください。コントローラのSATA電源ケーブルを電源コネクタに接続します。
确保您的 PC 已关闭。将控制器 SATA 电源线连接至电源接口。
確保您的 PC 已關閉。將控制器 SATA 電源線連接至電源接口。

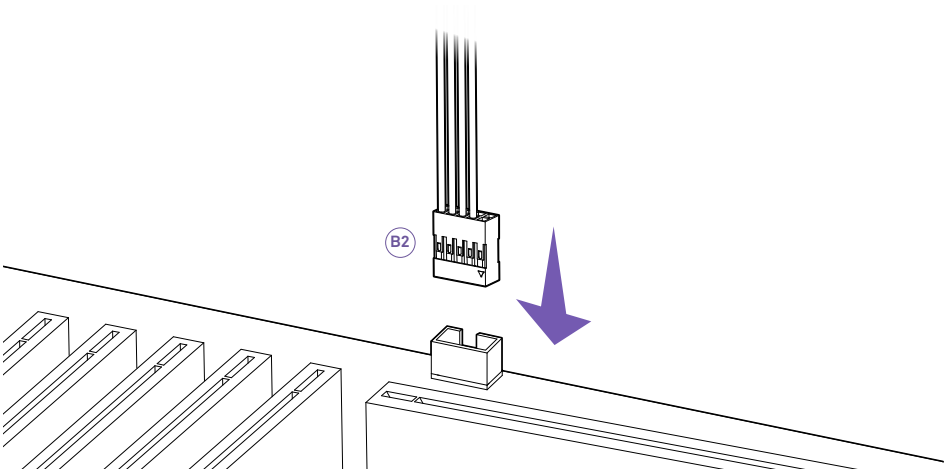

STEP 2

Connect the USB Cable to an internal USB 2.0 port on the motherboard.
Enchufa el cable USB en un puerto interno USB 2.0 de la placa base.
Branche le câble USB sur un port USB 2.0 interne de la carte mère.
Verbinde das USB-Kabel mit dem internen USB 2.0-Anschluss auf dem Motherboard.
Collegare il cavo USB a una porta USB 2.0 interna sulla scheda madre.
Ligue o cabo USB a uma porta USB 2.0 interna na motherboard.
USB 케이블을 마더보드의 내부 USB 2.0 포트에 연결합니다.
USBケーブルをマザーボード上の内部USB2.0ポートに接続します。
将 USB 电缆连接至主板上的内部 USB 2.0 接头。
將 USB 電纜連接至主板上的內部 USB 2.0 接頭。

SOFTWARE SETUP

DESCARGA DE CAM DE NZXT
TÉLÉCHARGEMENT DE NZXT CAM
HERUNTERLADEN VON NZXT CAM
DOWNLOAD DI NZXT CAM
DOWNLOAD DO NZXT CAM

NZXT CAM 다운로드
NZXT CAMのダウンロード
下载 NZXT CAM
下載 NZXT CAM

NZXT CAM

To enable control of your RGB Core Fans, download and install CAM from nzxt.com/software/cam.

Para poder controlar los ventiladores Core RGB, descárgate CAM de nzxt.com/software/cam e instálalo.

Afin de pouvoir commander tes ventilateurs RGB Core, télécharge et installe le logiciel CAM sur nzxt.com/software/cam.

Um die Steuerung der RGB Core-Lüfter zu ermöglichen, lade CAM von nzxt.com/software/cam herunter und installiere die Software.

Per poter controllare le tue ventole RGB Core, scarica e installa CAM dal link nzxt.com/software/cam.

Para ser possível o controlo das suas ventoinhas RGB Core, descarregue e instale o CAM a partir de nzxt.com/software/cam.

RGB 코어 팬을 제어하려면 nzxt.com/software/cam에서 CAM을 다운로드하여 설치합니다.

RGBコアファンを有効にするには、nzxt.com/software/camからCAMをダウンロードしてインストールしてください。

如需对 RGB Core 风扇进行管理，请从 nzxt.com/software/cam 下载并安装 CAM。

請從 nzxt.com/software/cam 下載和安裝 CAM 軟體，控制您的 RGB 風扇。

NZXT GLOBAL WARRANTY POLICY

This NZXT Global Warranty Policy governs the sale of products by NZXT to you.

I. WARRANTY LENGTH

Refurbished NZXT Product	Warranty Length for Parts
Fans	2 Years

Any replacement product will be covered under warranty for the remainder of the warranty period or thirty days, whichever is longer. Proof of purchase is required for warranty service.

II. WHO IS PROTECTED

The Warranty covers only NZXT products purchased by the original consumer.

III. WHAT IS AND IS NOT COVERED

Please note that our warranty is not an unconditional guarantee. If the product, in NZXT's reasonable opinion, malfunctions within the warranty period, NZXT will provide you at its sole discretion with a repaired or replacement product, either new or refurbished, with a similar function that is equal or greater in value depending on supply. Our warranty does not cover the following:

- any product or serial number/warranty sticker modification applied without permission from NZXT;
- any damage that is not a manufacturing defect;
- damage, deterioration or malfunction resulting from: accident, abuse, misuse, neglect, fire, water, lightning, or other acts of nature, unauthorized product modification or failure to follow instructions included with the product;
- improper installation, unauthorized alterations or modifications, or repair or attempted repair by anyone not authorized by NZXT;
- shipping or transport damage (claims must be made with the carrier);
- normal wear and tear.

NZXT does not warrant that this product will meet your requirements. It is your responsibility to determine the suitability of this product for your purpose. For NZXT Store orders, we cover two way return shipping for all exchanges and returns. For all other authorized dealers, NZXT Support does not cover return shipping and only covers one way shipping from NZXT back to the end user for exchanges. Two way expedited shipping is provided for all PSUs covered under the Less Than Three program, indiscriminate of purchase location, provided the location is an approved NZXT reseller.

IV. EXCLUSION OF DAMAGES (DISCLAIMER)

NZXT's sole obligation and liability under this warranty is limited to the repair or replacement of a defective product with either a new or refurbished product with a similar function that is equal or greater in value at our option. NZXT shall not, in any event, be liable for any incidental or consequential damage, including but not limited to damages resulting from interruption of service and loss of data, business, or for liability in tort relating to this product or resulting from its use or possession.

V. LIMITATIONS OF IMPLIED WARRANTIES

There are no other warranties, expressed or implied, including but not limited to those of merchantability or fitness for a particular purpose. The duration of implied warranties is limited to the warranty length specified in Paragraph I.

VI. TO OBTAIN TECHNICAL SUPPORT

If you have already referenced your product owner's manual and still need help, you may contact us by phone at +1 (800) 228-9395, by email at service@nzxt.com, or visit the NZXT Support site at nzxt.com/customer-support.

VII. HOW TO OBTAIN A WARRANTY SERVICE FROM NZXT

To receive a warranty service for your product when purchased directly from NZXT, you must submit a request via the NZXT Support site outlining the problem. If a technician deems the product defective or requiring testing, you will be required to provide a copy of your proof of purchase, which will enable you to submit a Return Merchandise Authorization "RMA" request.
Once approved, you`ll receive an RMA number, upon which you will be asked to ship the defective item back to NZXT with the RMA number clearly marked or labelled on the package. NZXT recommends that appropriate measures are taken to safeguard the product from damage during shipping.

VIII. APPLICABLE LAW AND ADDITIONAL LEGAL RIGHTS FOR CONSUMERS

This warranty gives you specific legal rights. These conditions are governed and construed in accordance with the laws of California (with exception of its conflict of law provisions), and the application of the United Nations Convention of Contracts for the International Sale of Goods is expressly excluded. The non-exclusive jurisdiction of the courts of California is agreed, which means that you may bring a claim to enforce your consumer protection rights in connection with this Global Warranty in the country which you have your habitual residence where you may have additional rights. These rights may vary.

For original consumers who are covered by consumer protection laws or regulations in their country, state, or province of purchase or, if different, their country, state, or province of residence, the benefits conferred by this warranty are in addition to all rights and remedies conveyed by such consumer protection laws and regulations. To the extent that liability under such consumer laws can be limited, NZXT's liability is limited, and its sole option, to repair or replacement, either new or refurbished, with a similar function that is equal or greater in value depending on supply.

In the United Kingdom:

- For NZXT products sold to customers in the UK, during the expected lifespan of your product your legal rights entitle you to the following:
  - Up to 30 days: if your goods are faulty, then you can get an immediate refund.
  - Up to six months: if your goods can't be repaired or replaced, then you're entitled to a full refund, in most cases.
  - Up to six years: if your goods do not last a reasonable length of time you may be entitled to some money back.
- If the person seeking to rely on the guarantee is not the original consumer, the NZXT Warranty will cover the product in relation to that person provided that they are able to provide proof of the transfer of the benefit of the guarantee from the original consumer.
- The implied warranties under the Consumer Rights Act 2015 says that your goods must be as described, fit for all purposes for which such goods are usually supplied, and of satisfactory quality.

In the EU:

- If you are a consumer and have your habitual residence in the EU, you additionally enjoy the protection afforded to you by provisions that cannot be derogated from by agreement by virtue of the law where you have your habitual residence.

IX. WARRANTY SERVICE FROM RESELLERS

In the event that a warranty service is sought, you must provide proof of purchase (store receipt or invoice) in order to receive the service and if deemed necessary, repair or replacement product.

In North America:

Within the first 60 days after purchase, please return your product (or for power supplies installed within our enclosures, just the failed power supply) to your dealer or reseller for a replacement. If the product is still within warranty and you can no longer return it to your dealer, please contact NZXT Customer Support (see above) for assistance and instructions. NZXT will not accept returns without prior approval and an RMA number.

In Europe:

Within the first year after purchase, please return your product (or for power supplies installed within our enclosures, just the failed power supply) to your dealer or reseller for a replacement. If the product is still within warranty and you can no longer return it to your dealer, please contact NZXT Customer Support (see above) for assistance and instructions. NZXT will not accept returns without prior approval.

In Australasia:

Within the first two years after purchase, please return your product (or for power supplies installed within our enclosures, just the failed power supply) to your dealer or reseller for a replacement. If the product is still within warranty and you can no longer return it to your dealer, please contact NZXT Customer Support (see above) for assistance and instructions. NZXT will not accept returns without prior approval.

The cost of shipping will be borne at the first instance by you; however, if the purchased item is defective, NZXT will reimburse reasonable postage or transportation of costs.

Outside North America, Europe, and Australasia:

If your product needs to be returned within the warranty period, please contact the retailer or distributor from whom you purchased the product.

X. NZXT.COM STORE RETURNS/EXCHANGE POLICY

Eligible products under this NZXT Warranty qualify for a full refund or exchange only with an authorized RMA number and if the item is returned to the NZXT.com store inventory within 30 days of purchase. Returns are not allowed beyond 30 days of the purchase date. The NZXT.com Store reserves the right to deny any return or exchange. Refunds will be credited to the original method of payment. To initiate a return, simply submit a request via NZXT support site.

REGULATORY STATEMENT



UKCA Declaration of Conformity

The object of the declaration described above is in conformity with the relevant UK harmonisation legislation:

- Electromagnetic Compatibility Regulations 2016
- Electrical Equipment (Safety) Regulations 2016
- The Restriction of the Use of Certain Hazardous Substances in Electrical and Electronic Equipment Regulations2012

RoHS Statement

This product is compliant to implemented RoHS (Restriction of Hazardous Substances) type regulations worldwide, including but not limited to China, India, Japan, Korea and European Union.

REACH statement

EU REACH SVHC Disclosure on Candidate List

REACH (Registration, Evaluation, Authorization and Restriction of Chemicals, EC 1907/2006) is the European Union's (EU) chemical substances regulatory framework. REACH requires NZXT Inc. to provide customers with sufficient information on Substances of Very High Concern (SVHC) contained in products in concentration above 0.1% weight by weight (w/w) to allow safe use of the product.

EU CE DoC

DECLARATION OF CONFORMITY **English**

The device complies with the requirements set out in the Council Directives relevant Union harmonisation legislation:

- EMC Directive 2014/30/EU
- LVD Directive 2014/35/EU
- RoHS Directive 2011/65/EU & (EU) 2015/863

DÉCLARATION DE CONFORMITÉ **Français**

L'appareil est conforme aux exigences définies dans les directives du Conseil relatives à la législation d'harmonisation de l'Union :

- Directive EMC 2014/30/UE
- Directive LVD 2014/35/UE
- Directive RoHS 2011/65/UE et (UE) 2015/863



To protect the global environment and as an environmentalist, NZXT must remind you that:
Under the European Union ("EU") Directive on Waste Electrical and Electronic Equipment,
Directive 2002/96/EC, which takes effect on August 13, 2005, products of "electrical and electronic equipment" cannot be discarded as municipal waste anymore and manufacturers of covered electronic equipment will be obligated to take back such products at the end of their useful life. NZXT will comply with the product take back requirements at the end of life of NZXT-branded products that are sold into the EU. You can return these products to local collection points.

En tant qu'écologiste et afin de protéger l'environnement, NZXT tient à rappeler ceci:
Au sujet de la directive européenne (EU) relative aux déchets des équipement électriques et électroniques, directive 2002/96/EC, prenant effet le 13 août 2005, que les produits électriques et électroniques ne peuvent être déposés dans les décharges ou tout simple-ment mis à la poubelle. Les fabricants de ces équipements seront obligés de récupérer certains produits en fin de vie. NZXT prendra en compte cette exigence relative au retour des produits en fin de vie au sein de la communauté européenne. Par conséquent vous
pouvez retourner localement ces matériels dans les points de collecte.

FCC, ISED Statement
This device complies with Part 15 of the FCC Rules. Operation is subject to the following two conditions: (1) This device may not cause harmful interference, and (2) this device must accept any interference received, including interference that may cause undesired operation.
CAN ICES-003(B) / NMB-003(B)

产品中有毒有害物质或元素的名称及含量标识表
限用物質及元素清單
HAZARDOUS SUBSTANCES TABLE



本标识内数字表示产品在正常使用状态下的环保使用年限为10年。
某些部件也可能有环保使用期限标识，其环保使用年限以标识内的数字为准。
说明：电路板/适配器：单板/电路模块上电子元器件的陶瓷或玻璃中含铅。

产品名称 / Product Name ：F120RGB Core Fan & F140RGB Core Fan
型　　号 / Model Number：RF-C12FF-B1, RF-C12FF-W1, RF-C12SF-B1, RF-C12TF-B1, RF-C12SF-W1, RF-C12TF-W1, RF-C14FF-B1, RF-C14FF-W1, RF-C14SF-B1, RF-C14DF-B1, RF-C14SF-W1, RF-C14DF-W1

部件名称	有毒有害物质或元素					
	铅(Pb)	汞(Hg)	镉(Cd)	六价铬(Cr(VI))	多溴联苯(PBB)	多溴联苯醚(PBDE)
PCBA及板上组件	○	○	○	○	○	○
连接器	○	○	○	○	○	○
金属结构件	○	○	○	○	○	○
塑料结构件	○	○	○	○	○	○
涂料	○	○	○	○	○	○
纸类及印刷品	○	○	○	○	○	○

本表格依据SJ/T 11364的规定编制。
○：表示该有害物质在该部件所有均质材料中的含量均在GB/T 26572规定的限量要求下。
○：Indicate that this hazardous substance contained in all homogeneous material of this part is below the limit requirement in GB/T 26572.
X：表示该有害物质至少在该部件的某一均质材料中的含量超出 GB/T 26572 规定的 限量要求,然该部件仍符合欧盟命令 2011/65/EU 的规范。
X：Indicate that this hazardous substance contained in all homogeneous material of this part is below the limit requirement in GB/T 26572.
说明：电路板：单板/电路模块上电子元器件的陶瓷或玻璃中含铅。

產品名稱 / Product Name ：F120RGB Core Fan & F140RGB Core Fan
型　　號 / Model Number：RF-C12FF-B1, RF-C12FF-W1, RF-C12SF-B1, RF-C12TF-B1, RF-C12SF-W1, RF-C12TF-W1, RF-C14FF-B1, RF-C14FF-W1, RF-C14SF-B1, RF-C14DF-B1, RF-C14SF-W1, RF-C14DF-W1

單元	限用物質及其化學符號					
	鉛(Pb)	汞(Hg)	鎘(Cd)	六價鉻(Cr(VI))	多溴聯苯(PBB)	多溴聯苯醚(PBDE)
PCBA及板上元件	○	○	○	○	○	○
連接器	○	○	○	○	○	○
金屬結構件	○	○	○	○	○	○
塑膠結構件	○	○	○	○	○	○
塗料	○	○	○	○	○	○
紙類及印刷品	○	○	○	○	○	○

備考1. ″超出0.1 wt %″ 及 ″超出0.01 wt %″ 係指限用物質之百分比含量超出百分比含量基準值。
備考2. ″○″ 係指該項限用物質之百分比含量未超出百分比含量基準值。
備考3. ″-″ 係指該項限用物質為排除項目。
說明：電路板：單板/電路模組上電子元器件的陶瓷或玻璃中含鉛。

SUPPORT AND SERVICE

SUPPORT AND SERVICE
If you have any questions or problems with the NZXT product you purchased, please don't hesitate to contact us using our support system. support.nzxt.com
Please include a detailed explanation of your problem and your proof of purchase. For comments and suggestions, you can e-mail our design team, designer@nzxt.com. Lastly we would like to thank you for your support by purchasing this product.
For more information about NZXT, please visit us online. NZXT Website : nzxt.com

SOPORTE Y SERVICIO
Si tiene preguntas o problemas con el producto NZXT que usted compró, no dude en ponerse en contacto con service@nzxt.com y suministrar una explicación detallada de su problema así como su prueba de compra. Puede hacer consultas sobre piezas de repuesto en support.nzxt.com. Para comentarios y sugerencias, escriba un mensaje de correo electrónico a nuestro equipo de diseño: designer@nzxt.com. Gracias por comprar un producto NZXT. Para más información acerca de NZXT, visítenos en línea. Página web de NZXT : nzxt.com

SUPPORT ET SERVICE
Si vous avez des questions ou des problèmes avec le produit NZXT que vous avez acheté, n'hésitez pas à contacter service@nzxt.com avec une description détaillée de votre problème et votre preuve d'achat. Vous pouvez aussi commander des pièces de remplacement auprès support.nzxt.com. Pour les commentaires et les suggestions, envoyez un email à notre équipe de design, designer@nzxt.com. Merci d'avoir acheté ce produit de NZXT. Pour plus d'informations sur NZXT, visitez notre site Web. Site Web de NZXT : nzxt.com

KUNDENDIENST UND SERVICE
Falls Fragen oder Probleme bezüglich Ihres NZXT-Produktes auftreten, wenden Sie sich bitte mit einer detaillierten Problembeschreibung und Ihrem Kaufbeleg an service@nzxt.com. Ersatzteile können Sie unter support.nzxt.com anfragen. Kommentare und Anregungen senden Sie bitte per designer@nzxt.com an unser Designteam. Vielen Dank, dass Sie ein NZXT-Produkt erworben haben. Weitere Informationen über NZXT erhalten Sie im Internet. NZXT-Webseite : nzxt.com

ASSISTENZA E SERVIZIO
In caso di dubbi o problemi con il prodotto NZXT acquistato, non esitate a contattarci utilizzando il nostro sistema di assistenza. support.nzxt.com
Includere una spiegazione dettagliata del problema e la prova di acquisto. Per commenti e suggerimenti, siete pregati di inviare un messaggio al nostro team di progettisti, all'indirizzo: designer@nzxt.com. Infine, vogliamo ringraziarvi del vostro supporto con l'acquisto di questo prodotto. Per altre informazioni su NZXT, visitate il nostro sito. Sito NZXT : nzxt.com

ASSISTÊNCIA E MANUTENÇÃO
Caso tenha questões ou problemas com o produto NZXT adquirido, não hesite em contactar-nos através do endereço service@nzxt.com fornecendo a explicação detalhada do seu problema e a prova de compra. Poderá solicitar peças de substituição através do endereço support.nzxt.com. Para comentários e sugestões, contacte a nossa equipa de design através do endereço de e-mail, designer@nzxt.com. Obrigado por ter adquirido um produto NZXT. Para mais informações acerca da NZXT, visite-nos online. Web site da NZXT : nzxt.com

지원 및 서비스

구입한 NZXT 제품과 관련하여 질문 또는 문제가 있을 경우, 당사의 지원 시스템(support.nzxt.com)을 사용하여 문의하십시오. 문제를 자세히 기술하고 구매 증빙을 제출하십시오. 의견 또는 제안 사항이 있을 경우 당사 설계 팀에 designer@nzxt.com으로 이메일을 보내십시오. 마지막으로 이 제품을 구입하여 당사를 응원해 주셔서 감사합니다. NZXT에 대해 자세히 알려면 온라인으로 방문하십시오. NZXT 웹사이트 : nzxt.com

サポートおよびサービス

購入されましたNZXTの製品に関するご質問または問題は、問題の詳細および購入の証明を添えて、ご遠慮なくservice@nzxt.comまでご連絡ください。交換部品はsupport.nzxt.comまでお尋ねください。ご意見およびご提案は弊社設計チーム、designer@nzxt.com までメールを送信してください。NZXT製品をご購入いただきましてありがとうございます。NZXTに関する詳細は、インターネット上のウェブサイトをご覧ください。NZXT ウェブサイト : nzxt.com

支持和服务

如果有任何疑问或者在使用 NZXT 产品的过程中遇到任何问题,欢迎联络 service@nzxt.com,联络时请提供关于问题的详细说明及购买凭证。您可以向 support.nzxt.com 查询更换部件。如有任何意见或建议,欢迎致信我们的设计团队,电子邮件地址是 designer@nzxt.com。感谢您购买NZXT产品。有关NZXT 的更多信息,请造访我们的在线网站。NZXT 网站 : nzxt.com

支援和服務

如果在使用NZXT 產品的過程中有遇到任何問題或疑問，歡迎聯繫 service@nzxt.com， 並請提供問題的詳細敘述及購買證明。您可以透過 support.nzxt.com 查詢更換部件。如有任何意見或建議，歡迎來信與設計團隊聯繫 designer@nzxt.com。最後，感謝您購買 NZXT 產品。有關 NZXT 的更多信息，請訪問我們的網站。NZXT 網站 : nzxt.com

- Visit nzxt.com/warranty and support.nzxt.com for information on warranty coverage and service.
- Visite el sitio Web nzxt.com/warranty y support.nzxt.com para obtener información sobre la cobertura y el servicio de la garantía.
- Visitez nzxt.com/warranty et support.nzxt.com pour les informations de la couverture de la garantie et du service.
- Informationen zu Geltungsbereich und Service der Garantie finden Sie unter support.nzxt.com und nzxt.com/warranty.
- Visitare il sito nzxt.com/warranty e support.nzxt.com per informazioni sulla copertura e sul servizio della garanzia.
- Visite nzxt.com/warranty e support.nzxt.com para obter informações sobre a cobertura da garantia e assistência.
- 제품 보증 범위와 서비스 정보를 확인하시려면 nzxt.com/warranty 또는 support.nzxt.com 을 방문해 주시기 바랍니다.
- 保証範囲およびサービスに関する情報については、support.nzxt.com と nzxt.com/warranty にアクセスしてください。
- 请造访 nzxt.com/warranty 和 support.nzxt.com 了解保修范围和服务的信息。
- 請訪問 nzxt.com/warranty 和 support.nzxt.com 了解產品保固範圍和更多服務訊息。

NZXT

NZXT, Inc. | 15736 E. Valley Blvd, City of Industry, CA 91744, USA
NZXT Europe GmbH | Ammerthalstrasse 32 Kirchheim bei Muenchen 85551, Germany
NZXT UK Ltd. | First Floor 5 Fleet Place LONDON EC4M 7RD, GB United Kingdom
+1 (800) 228-9395 / service@nzxt.com / nzxt.com
立光科技國際股份有限公司 | 台北市中山區長安東路二段36巷3號1樓

tehnoteka

https://tehnoteka.rs

Ovaj dokument je originalno proizveden i objavljen od strane proizvođača, brenda NZXT, i preuzet je sa njihove zvanične stranice. S obzirom na ovu činjenicu, Tehnoteka ističe da ne preuzima odgovornost za tačnost, celovitost ili pouzdanost informacija, podataka, mišljenja, saveta ili izjava sadržanih u ovom dokumentu.

Napominjemo da Tehnoteka nema ovlašćenje da izvrši bilo kakve izmene ili dopune na ovom dokumentu, stoga nismo odgovorni za eventualne greške, propuste ili netačnosti koje se mogu naći unutar njega. Tehnoteka ne odgovara za štetu nanesenu korisnicima pri upotrebi netačnih podataka. Ukoliko imate dodatna pitanja o proizvodu, ljubazno vas molimo da kontaktirate direktno proizvođača kako biste dobili sve detaljne informacije.

Za najnovije informacije o ceni, dostupnim akcijama i tehničkim karakteristikama proizvoda koji se pominje u ovom dokumentu, molimo posetite našu stranicu klikom na sledeći link:

https://tehnoteka.rs/p/nzxt-f120-rgb-core-rf-c12sf-b1-ventilator-za-pc-akcija-cena/