tehnoteka

https://tehnoteka.rs

Uputstvo za upotrebu (EN)

AMAZFIT GTS 2 Mini Black pametni sat

amazfit



Tehnoteka je online destinacija za upoređivanje cena i karakteristika bele tehnike, potrošačke elektronike i IT uređaja kod trgovinskih lanaca i internet prodavnica u Srbiji. Naša stranica vam omogućava da istražite najnovije informacije, detaljne karakteristike i konkurentne cene proizvoda.

Posetite nas i uživajte u ekskluzivnom iskustvu pametne kupovine klikom na link:

https://tehnoteka.rs/p/amazfit-gts-2-mini-black-pametni-sat-akcija-cena/

trovaprezzi.it
Questo manuale d'istruzione è fornito da trovaprezzi.it. Scopri tutte le offerte per Amazfit GTS 2 Mini Verde o cerca il tuo prodotto tra le migliori offerte di Smartwatch e Orologi Sportivi

AMAZFIT

Amazfit GTS 2 mini
Product Manual
A2018

01 Package Contents

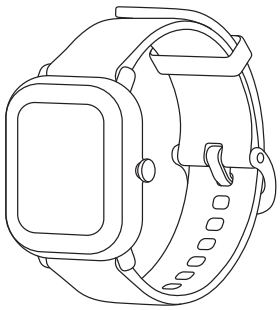

Smartwatch with band × 1

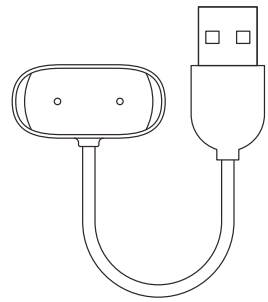

Charging base × 1

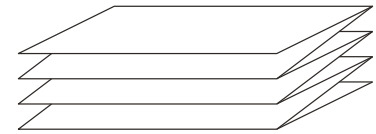

Instruction Manual × 1

02 About the Watch

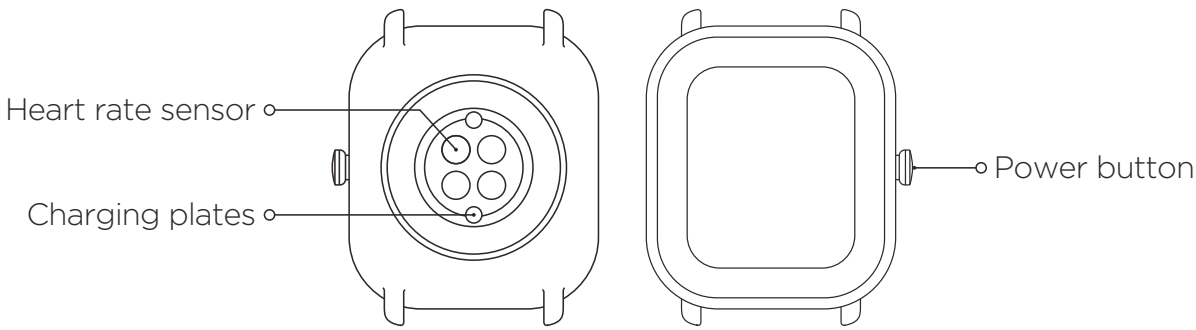

Note:
Press and hold the power button to power on the watch. If the watch cannot be turned on, please charge it first.

03 Pairing the Watch

1. Scan the QR code on the Instruction Manual with your mobile phone to download the app to your mobile phone. You can also download the latest version of App from the Google Play Store or Apple App store.
2. Open the APP, register an account and log in.
3. Follow the steps in the app to pair your watch correctly. Once pairing is complete, the watch will display the correct time.
4. You can set the other watch functions as needed.

Note:

1. For a better user experience, please use the most recent version of the app.
2. The operating system needs to be Android 5.0, iOS 10.0, or above.
3. Do not pair the watch directly using your mobile phone's Bluetooth. Follow the steps in the app to pair your watch correctly.

Download Zepp App

04 Charging the Watch

1. Connect the USB port of the watch charging cable to a mobile phone charger or a computer USB port.
2. Put the watch into the charging base. Pay attention to the direction and position of the watch, and make sure that the metal contacts on the back of the watch fit closely with the charging base.
3. When charging starts, the watch screen displays the charging progress.

Note:

1. Please use the charging base that comes with the watch. Make sure that the charging base is dry before charging.
2. Please use a 1A or above power adapter.

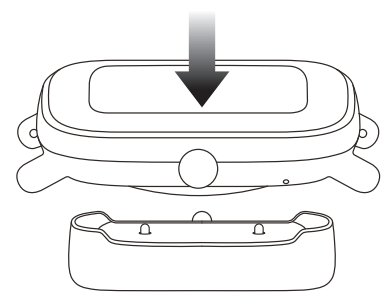

05 Disassembly and Assembly of the Watch Strap

Please refer to the illustrations to disassemble or assemble the watch strap.

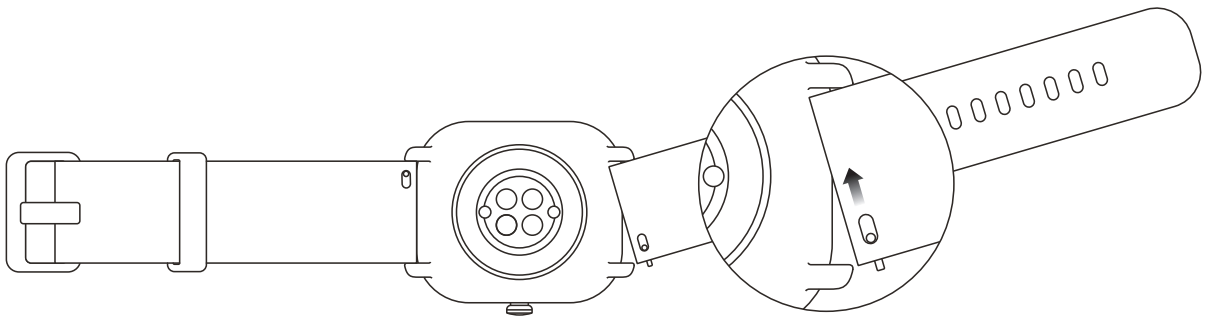

Note:
Once the strap is assembled, pull the strap properly to ensure it is installed successfully.

06 Charging the Watch

1. Wear the watch strap not too tightly or too loosely, and leave enough space for the skin to breathe. This makes you feel comfortable and allows the sensor to function.
2. When measuring blood oxygen saturation, wear the watch correctly. Avoid wearing the watch on the wrist joint, keep your arm flat, maintain comfortable (appropriately tight) fitting between the watch and the skin of your wrist, and keep your arm still throughout the measurement process. When affected by external factors (arm sag, arm sway, arm hair, tattoo, etc.), the measurement result may be inaccurate or the measurement may fail and provide no output.
3. We recommend that you tighten the watch strap during exercise and loosen it afterwards.

07 Basic Parameters

Product model: A2018
Water resistance rating: 5 ATM
Operating temperature: 0°C to 45°C
Bluetooth frequency: 2400–2483.5 MHz
Input: 5V d.c. 500mA MAX
Bluetooth version: BLE V5.0
BLE output power: <5 dBm
View product certification information on the watch's Settings > System > Regulation page.
Device requirements: Devices installed with Android 5.0 or iOS 10.0 or above OS versions

The Bluetooth® word mark and logos are registered trademarks owned by Bluetooth SIG, Inc. and any use of such marks by Anhui Huami Information Technology Co., Ltd. is under license. Other trademarks and trade names are those of their respective owners.

08 Regulatory Notice

This device complies with part 15 of the FCC Rules. Operation is subject to the following two conditions:
(1) This device may not cause harmful interference, and
(2) This device must accept any interference received, including interference that may cause undesired operation.

FCC ID:2AC8UA2018

Any changes or modifications that are not expressly approved by the party responsible for the compliance may void the user's authority to operate the device.

Note:
This equipment has been tested and found to comply with the limits for a Class B digital device, pursuant to part 15 of the FCC Rules. These limits are designed to provide reasonable protection against harmful interference in a residential installation. This equipment generates, uses and can radiate radio frequency energy and, if not installed and used in accordance with the instructions, may cause harmful interference to radio communications. However, there is no guarantee that interference will not occur in a particular installation. If this equipment does cause harmful interference to radio or television reception, which can be determined by turning the equipment off and on, the user is encouraged to try to correct the interference by one or more of the following measures:

— Reorient or relocate the receiving antenna.
— Increase the separation between the equipment and receiver.
— Connect the equipment into an outlet on a circuit different from that to which the receiver is connected.
— Consult the dealer or an experienced radio/TV technician for help.

The device has been evaluated to meet general RF exposure requirement. The device can be used in portable exposure condition without restriction.

This device contains licence-exempt transmitter(s)/receiver(s) that comply with Innovation, Science and Economic Development Canada's licence-exempt RSS(s). Operation is subject to the following two conditions:

1. This device may not cause interference.
2. This device must accept any interference, including interference that may cause undesired operation of the device.

IC: 21806-A2018
CAN ICES-3(B)/NMB-3(B)

Le présent appareil est conforme aux CNR d'Industrie Canada applicables aux appareils radioexempts de licence. L'exploitation est autorisée aux deux conditions suivantes :

1. l'appareil ne doit pas produire de brouillage, et
2. l'utilisateur de l'appareil doit accepter tout brouillage radioélectrique subi, même si le brouillage

est susceptible d'en compromettre le fonctionnement.

Under Industry Canada regulations, this radio transmitter may only operate using an antenna of a type and maximum (or lesser) gain approved for the transmitter by Industry Canada. To reduce potential radio interference to other users, the antenna type and its gain should be so chosen that the equivalent isotropically radiated power (e.i.r.p.) is not more than that necessary for successful communication.

Conformément à la réglementation d'Industrie Canada, le présent émetteur radio peut fonctionner avec une antenne d'un type et d'un gain maximal (ou inférieur) approuvé pour l'émetteur par Industrie Canada. Dans le but de réduire les risques de brouillage radioélectrique à l'intention des autres utilisateurs, il faut choisir le type d'antenne et son gain de sorte que la puissance isotrope rayonnée équivalente (p.i.r.e.) ne dépasse pas l'intensité nécessaire à l'établissement d'une communication satisfaisante.

IS 13252(PART 1):2010/
IEC 60950-1 :2005

R-41140821
www.bis.gov.in

MCMC
HIDF19000259

09 Disposal and Recycling Information

All products bearing this symbol are waste electrical and electronic equipment (WEEE as in directive 2012/19/EU) which should not be mixed with unsorted household waste. Instead, you should protect human health and the environment by handing over your waste equipment to a designated collection point for the recycling of waste electrical and electronic equipment, appointed by the government or local authorities. Correct disposal and recycling will help prevent potential negative consequences to the environment and human health. Please contact the installer or local authorities for more information about the location as well as terms and conditions of such collection points.

10 Certifications and Safety Approvals

Hereby, Anhui Huami Information Technology Co., Ltd. declares that the radio device type A2018 is in compliance with Directive 2014/53/EU. The full text of the EU declaration of conformity is available at the following internet address: https://support.amazfit.com/en/

For more regulatory information and product certification/-compliance logos related to Amazfit GTS 2 mini, please go to Regulatory on your Amazfit GTS 2 mini.

11 Battery Safety

1. This device is equipped with a built-in battery that cannot be removed or replaced. Do not disassemble or modify the battery by yourself.
2. Disposal of a battery into fire or a hot oven, or mechanically crushing or cutting of a battery, that can result in an explosion.
3. Leaving a battery in an extremely high temperature surrounding environment that can result in an explosion or the leakage of flammable liquid or gas.
4. A battery subjected to extremely low air pressure that may result in an explosion or the leakage of flammable liquid or gas.

12 Safety Notice

1. Do not allow children or pets to bite or swallow the product or its accessories, as this may cause injury.
2. Do not place this product under excessively high or low temperatures, which may cause the product to catch fire or explode.
3. Do not place this product near heat sources or open flame, such as ovens and electric heaters.
4. Some people may experience allergic skin reactions to plastics, leathers, fibers, and other materials, and symptoms such as redness, swelling, and inflammation will occur after long-term contact with this product's components. If you experience such symptoms, please discontinue use and consult your doctor.

5. Do not use unauthorized or incompatible power adapters or data cables, which may damage the watch and accessories, or cause fire, explosion, or other hazards.
6. The radio waves generated by this product may affect the normal operation of implanted medical devices or personal medical devices, such as pacemakers and hearing aids. If you use any such medical devices, consult the manufacturer for relevant usage restrictions.
7. Do not dispose of this device or its accessories as ordinary household waste. Please comply with local regulations for the disposal of this device and its accessories, and support recycling.

13 Repair and Maintenance

1. Avoid using detergents such as soap, hand sanitizer, bath foam, or lotion for cleaning to prevent chemical residues from irritating the skin, corroding the device, or degrading the water resistance of the device.
2. After wearing the device while bathing (for devices that support bathing), swimming (for devices that support swimming), or sweating, please promptly clean and dry the device.
3. The leather strap is not waterproof. Avoid getting the strap wet, as this may shorten its service life.
4. When using light-colored watch straps, avoid contact with dark clothing to prevent staining.
5. Do not wear your watch during snorkeling, hot showers, hot springs, saunas (steam rooms), diving, underwater diving, water skiing, and other activities involving high-speed water currents.
6. Do not place the device in direct sunlight for long periods. Excessively high or low ambient temperature may cause device failure.
7. Handle with care during transportation. Keep the device dry and away from humidity.

14 Troubleshooting

Please check the FAQ on the website: https://support.amazfit.com/en.

15 Warranty and Return Policy

The Amazfit Limited Warranty covers Amazfit products against manufacturing defects beginning on the original purchase date. The warranty period is 12 months or another specified period as the applicable consumer laws in the consumer's country of purchase require. Our warranty is in addition to rights provided by applicable consumer laws.
Official website: en.amazfit.com
Support: support.amazfit.com

tehnoteka

https://tehnoteka.rs

Ovaj dokument je originalno proizveden i objavljen od strane proizvođača, brenda Amazfit, i preuzet je sa njihove zvanične stranice. S obzirom na ovu činjenicu, Tehnoteka ističe da ne preuzima odgovornost za tačnost, celovitost ili pouzdanost informacija, podataka, mišljenja, saveta ili izjava sadržanih u ovom dokumentu.

Napominjemo da Tehnoteka nema ovlašćenje da izvrši bilo kakve izmene ili dopune na ovom dokumentu, stoga nismo odgovorni za eventualne greške, propuste ili netačnosti koje se mogu naći unutar njega. Tehnoteka ne odgovara za štetu nanesenu korisnicima pri upotrebi netačnih podataka. Ukoliko imate dodatna pitanja o proizvodu, ljubazno vas molimo da kontaktirate direktno proizvođača kako biste dobili sve detaljne informacije.

Za najnovije informacije o ceni, dostupnim akcijama i tehničkim karakteristikama proizvoda koji se pominje u ovom dokumentu, molimo posetite našu stranicu klikom na sledeći link:

https://tehnoteka.rs/p/amazfit-gts-2-mini-black-pametni-sat-akcija-cena/