tehnoteka

https://tehnoteka.rs

Uputstvo za upotrebu (EN)

COOLER MASTER kućište MasterBox MB600L V2 MB600L2-KNNN-S00



Tehnoteka je online destinacija za upoređivanje cena i karakteristika bele tehnike, potrošačke elektronike i IT uređaja kod trgovinskih lanaca i internet prodavnica u Srbiji. Naša stranica vam omogućava da istražite najnovije informacije, detaljne karakteristike i konkurentne cene proizvoda.

Posetite nas i uživajte u ekskluzivnom iskustvu pametne kupovine klikom na link:

https://tehnoteka.rs/p/cooler-master-kuciste-masterbox-mb600l-v2-mb600l2-knnn-s00-akcija-cena/

Make It Yours.

MASTERBOX **MB600L V2** WITH ODD

A



x16

B



x8

C



x8

D



x1

E



x10

EN	Package Content	**HU**	A csomag tartalma
AR	حزمة المحتوى	**ID**	Isi Paket
BG	Съдържание на пакета	**IT**	Contenuto della scatola
CHS	零件包	**JP**	パッケージ内容物
CHT	零件包	**KR**	구성품
CS	Obsah balení	**NL**	Verpakkingsinhoud

DE	Verpackungsinhalt
EL	Περιεχόμενα Συσκευασίας
ES	Contenido Paquete
FR	Contenu de l'emballage
FA	محتویات
PL	Zawartość opakowania
PT	Conteúdo da embalagem
RU	Комплектация
SR	Saržaj pakovanja
TR	Paket içeriği

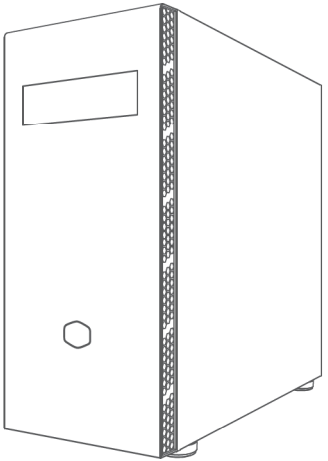

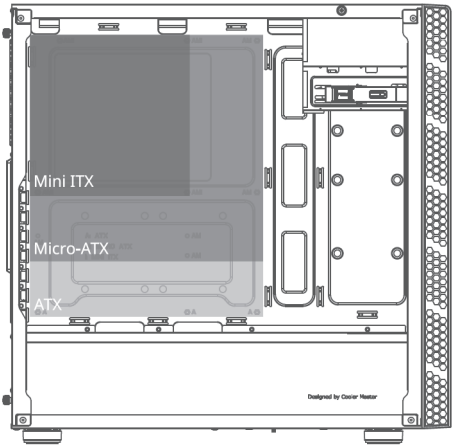
Mini ITX
Micro-ATX
ATX
Designed by Cooler Master

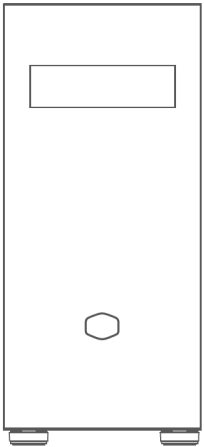

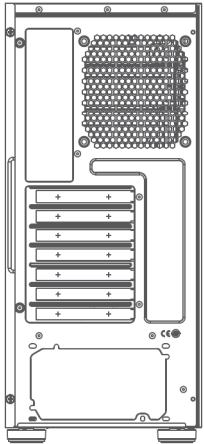

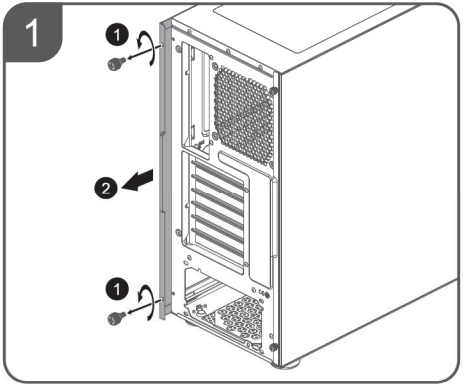
1
1
2
1

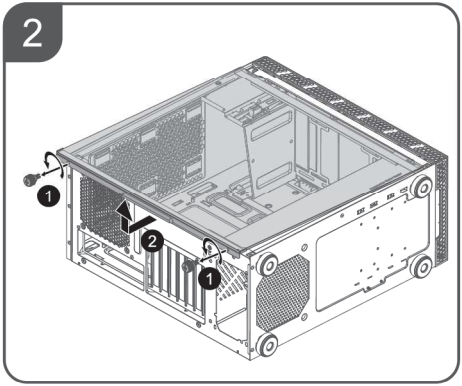
2
1
2
1

3

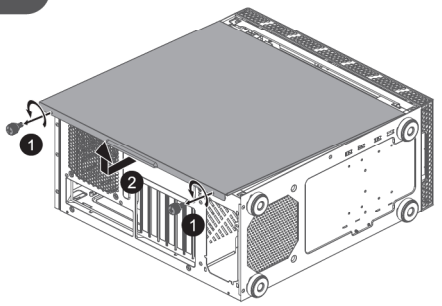

OR

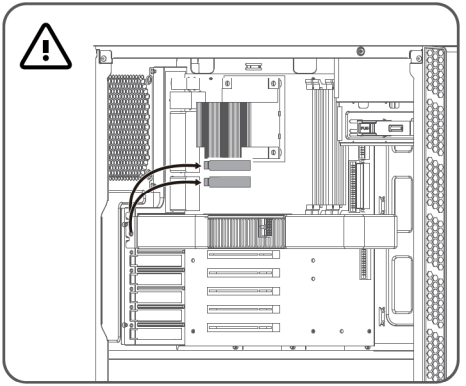

2



4

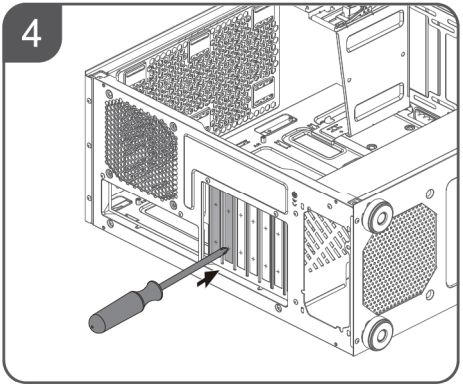

1

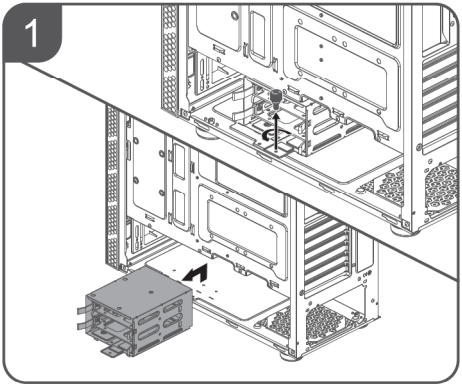

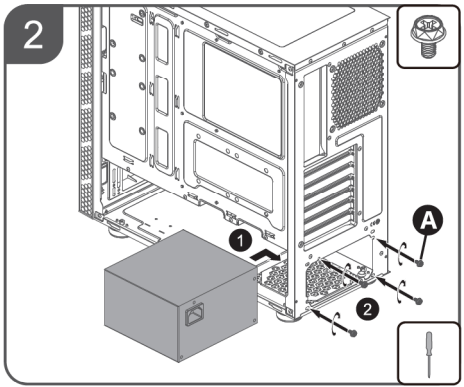

3



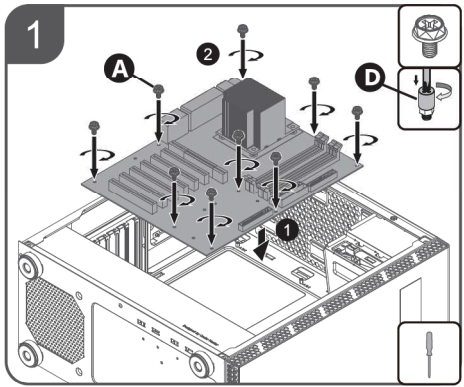

4



1

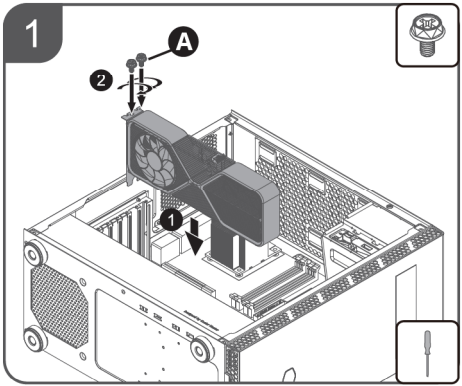

5



2.5″

1

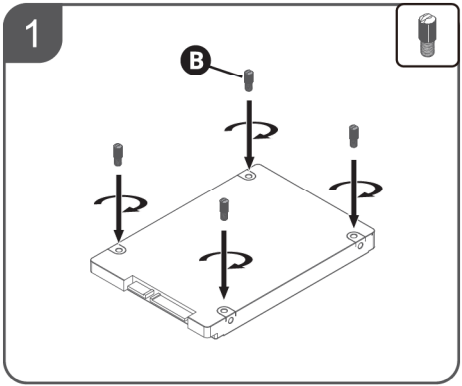

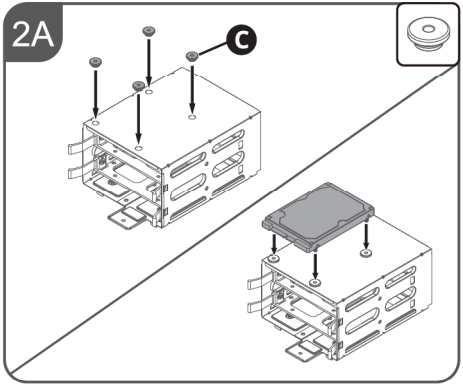
2A
C

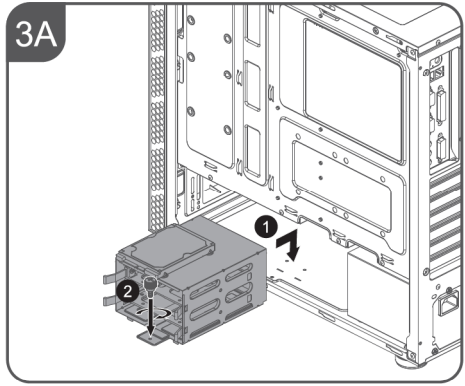
3A
1
2

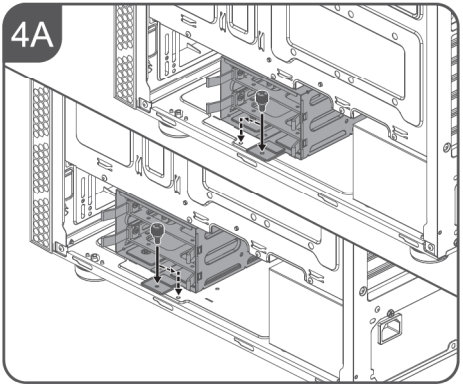

OR

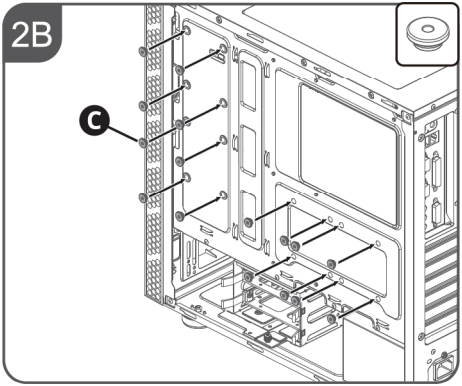

6

3.5”

3B

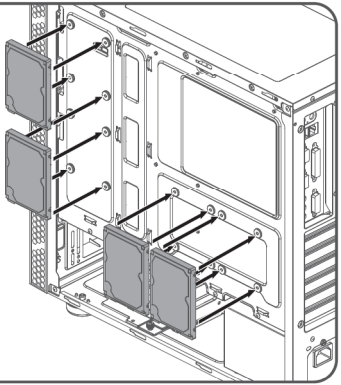

1

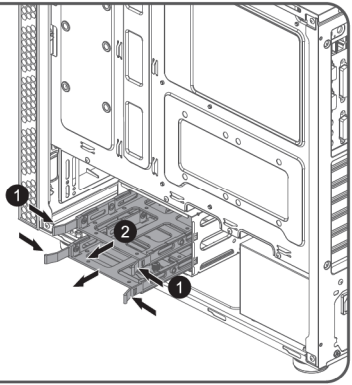

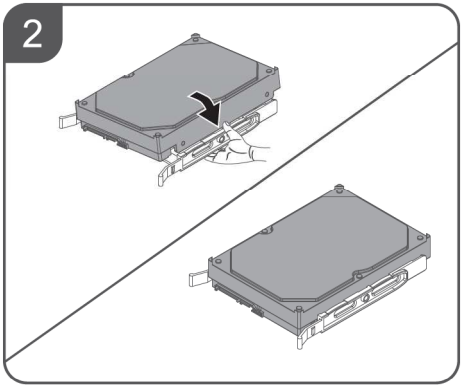
2

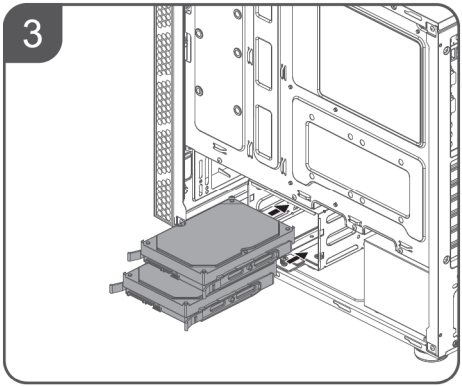
3

7

120/140mm

1

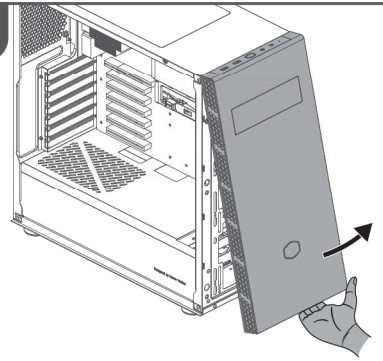

2A

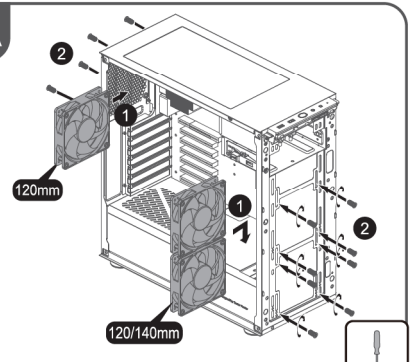

OR

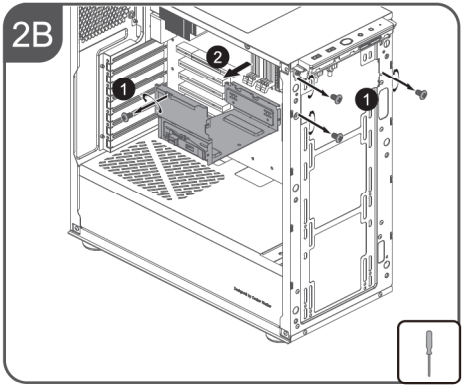

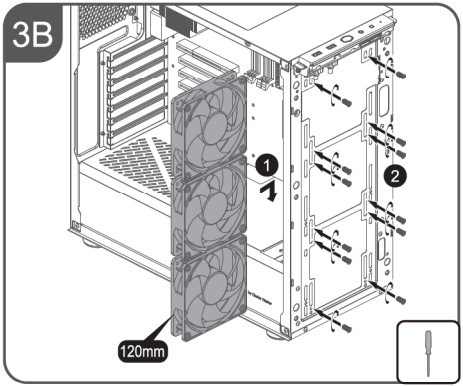

OR

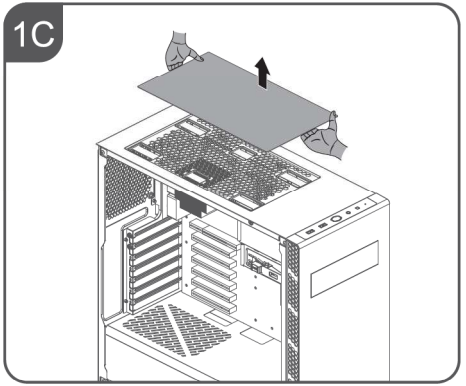

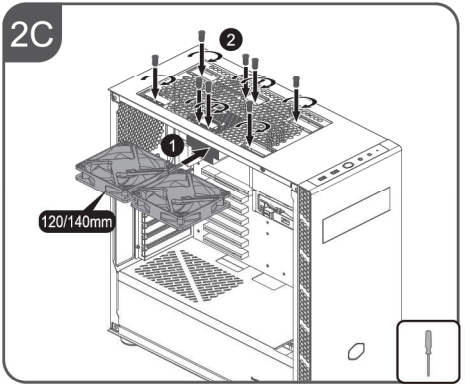



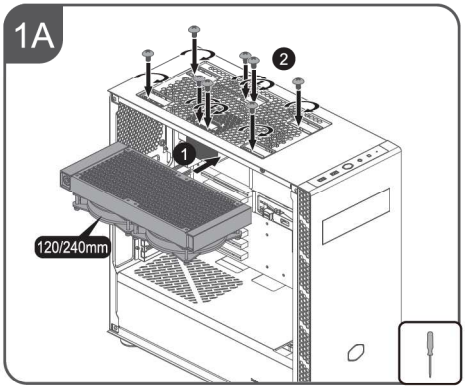

OR

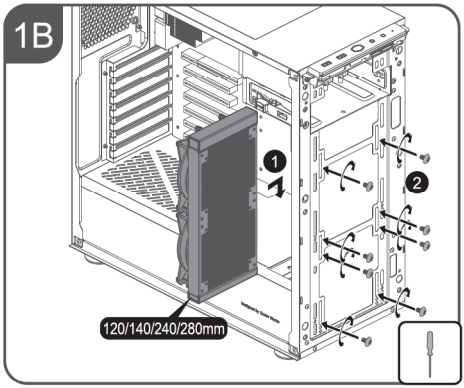

OR

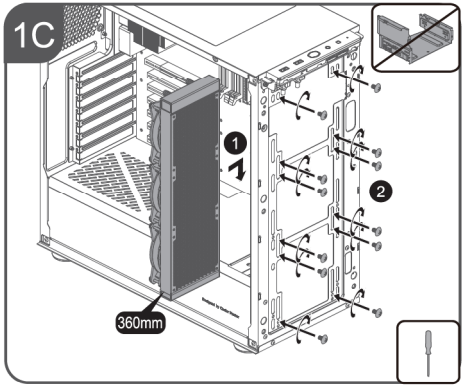

OR

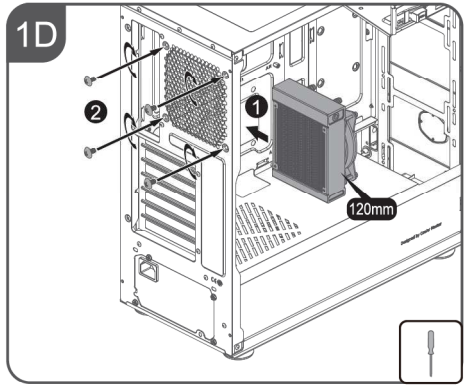

9



5.25”

1

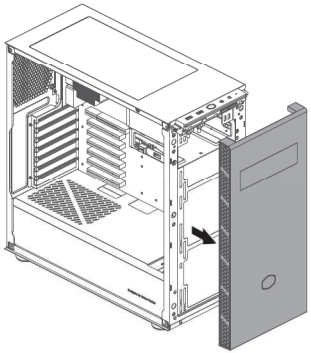

2

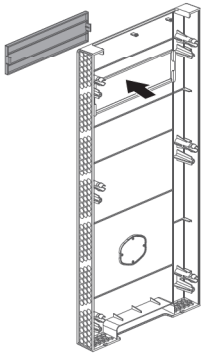

3

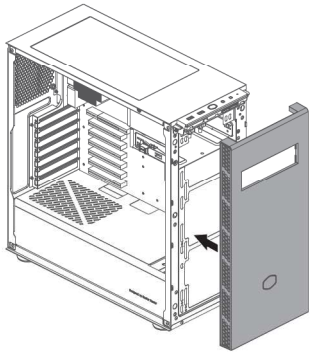

4

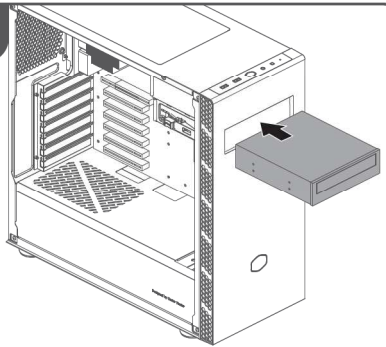

Warranty information

English (EN)

Cooler Master guarantees that this device is free of defect in material and workmanship, and provides a two-year limited hardware warranty for the device commencing from the date of purchase. Please keep your receipt for proof of purchase.
This product is designed for computer usage only. Using this device in any other capacity voids the warranty. If you are not familiar with computer hardware installation, please ask for professional assistance.
The warranty offered covers normal use. Defect or damage that result from improper operation, storage, misuse or abuse, accident or neglect, which are not the fault of Cooler Master, are exclude from warranty coverage.

Note: the warranty is voided by removal or alternation of product or parts identification labels.
*All OEM/bulk packaging product come with one year limited warranty
*In case of conflict between the warranty provided by the country of point of sale and this manual, the warranty of the actual country of point of sale shall be the prevailing document.
*In case of malfunction of electronic components or need of accessories purchase during the warranty period, please return to the original store of purchase.

简体中文 (ZHS)

Cooler Master保证本设备之材质及功能无瑕疵，并提供本设备二年之硬件有限保固服务，自购买日算起。请把您的收据放在安全之处，以免Cooler Master要求您提供本证明。本产品专为计算机设计。一旦将本设备用于其它用途，则保固无效。若您不熟悉硬件安装程序，请寻求专家之协助。保固服务仅适用于正常使用下之故障情形。若本公司发现设备毁损之原因为滥用、改造、误用、疏忽、电压供应错误、空气及水污染意外和自然灾害，则保固无效。

注意：重贴或条形码遭毁坏而无法辨识保固期限者，则不在此限。

*所有OEM及工业包装的产品皆保固一年。

*如果销售国家所提供的保固与本说明互有冲突时，应以实际销售国家之保固为准。

*保固期内遇有电子零件故障或配件购买需求，请洽原购买商店。

繁體中文 (ZHT)

Cooler Master保證本設備之材質及做工無瑕疵，並提供本設備二年之硬體有限保固服務，自購買日算起。請把您的收據放在安全之處，以免Cooler Master要求您提供本證明。本產品專為電腦設計。一旦將本設備用於其它用途，則保固無效。若您不熟悉硬體安裝程式，請尋求專家之協助。保固服務僅適用于正常使用下之故障情形。若本公司發現設備毀損之原因為濫用、改造、誤用、疏忽、電壓供應錯誤、空氣及水污染意外和自然災害，則保固無效。

注意：重貼或條碼遭毀壞而無法辨識保固期限者，則不在此限。

*所有OEM及工業包裝的產品皆保固一年。

*如果銷售國家所提供的保固與本說明互有衝突時，應以實際銷售國家之保固為准。

*保固期內遇有電子零件故障或配件購買需求，請洽原購買商店。

部件名称	有毒有害物质或元素					
	铅 (Pb)	汞 (Hg)	镉 (Cd)	六价铬 [Cr(VI)]	多溴联苯 (PBB)	多溴二苯醚 (PBDE)
机箱组	×	○	○	○	○	○
面板组	×	○	○	○	○	○
I/O模组	×	○	○	○	○	○
风扇	×	○	○	○	○	○
零件包	×	○	○	○	○	○
电源	×	○	○	○	○	○

本表格依据SJ/T 11364的规定编制。
○：表示该有害物质在该部件所有均质材料中的含量均在GB/T 26572规定的限量要求以下。
×：表示该有害物质至少在该部件的某一均质材料中的含量超出GB/T 26572规定的限量要求。

Note: The form is only applied to China law.

Europe - Cooler Master Europe B.V.
Lodewijkstraat 1b, 5652AC Eindhoven, The Netherlands
Tel: +31-(0)40-702-0900

North America - Cooler Master NA
2929 E Imperial Hwy Ste #110, Brea, CA 92821, USA
Tel: +1-888-624-5099

Türkçe (TR)

Cooler Master bu cihazda malzeme ve işçilik hatası bulunmadığını garanti eder ve cihaz için satın alma tarihinden başlayan iki yılla sınırlı bir donanım garantisi verir. Alımı belgelemek için lütfen makbuzunuzu saklayın.
Bu ürün yalnızca bilgisayar kullanımı için tasarlanmıştır. Bu cihazın başka bir kapsamda kullanılması garantiyi geçersiz kılar. Bilgisayar donanımı montajını bilmiyorsanız, lütfen profesyonel yardım talep edin.
Verilen garanti normal kullanım içindir. Cooler Master'ın hatası olmayan uygunsuz kullanım, depolama, yanlış kullanım veya kötü kullanım, kaza ya da ihmalden kaynaklanan arıza ya da hasarlar garanti kapsamının dışındadır.

Dikkat: Ürün ya da parça tanıtma etiketlerinin sökülmesi ya da değiştirilmesi garantiyi geçersiz kılar.
*1. Tüm OEM/ambalajsız ürünler bir yıl sınırlı garanti ile gelir
*2. Garanti verilen ülkedeki satış noktası ve bu kullanma kılavuzu arasında bir çelişki olursa, satış noktasının bulunduğu ülkedeki garanti hükümleri öncelik taşır.
*3. Elektronik bileşenlerin arızalanması ya da garanti süresinde aksesuarların satın alınması gerekirse, lütfen ürünü satın aldığınız mağazaya başvurunuz.

Asia Pacific - Cooler Master Technology Inc.
8F., No. 788-1, Zhongzheng Rd., Zhonghe Dist., New Taipei City 23586, Taiwan (R.O.C.).
Tel: +886-2-2225-3517

China - Cooler Master China
Room 2062,Floor 6, No. 421, Weiqing Rd., Jinshan District,Shanghai City,China
Tel: +86-21-51872177

Cooler Master Products: Limited Warranty
This document describes the warranty terms for all Cooler Master product sold in Australia

For Australia only:
Our goods come with guarantees that cannot be excluded under the Australian Consumer Law. You are entitled to a replacement or refund for a major failure and for compensation for any other reasonably foreseeable loss or damage. You are also entitled to have the goods repaired or replaced if the goods fail to be of acceptable quality and the failure does not amount to a major failure. (Cooler Master Technology Inc., 8F., No. 788-1, Zhongzheng Rd., Zhonghe Dist., New Taipei City 23586, Taiwan (R.O.C.).)
Telephone: +886-2-2225-3517 (standard international call charges apply.)

Who the Warranty Protects: This Warranty is valid to the original purchaser only.

What the warranty protects:
This warranty is valid only for the Cooler Master Products distributed by authorized dealer(s) in Australia. Please contact Cooler Master for warranty information and services:
• Cooler Master Support: account.coolermaster.com

What Is and Is Not Covered
It is important to note that our warranty is not an unconditional guarantee for the duration of the Program. Any replaced parts become the property of Cooler Master. The Program does not apply to the software component of a product or a product which has been damaged due to accident, misuse, abuse, improper installation, usage not in accordance with product specifications and instructions, natural or personal disaster, or unauthorized alterations, repairs or modifications.

The Program does not cover any events such as below:
• Any damages unrelated to manufacturing defects.
• Any unsuitable environment or use of the product in Cooler Master Opinion.
• Any product which has been modified without official permission from Cooler Master, or on which the serial number or warranty sticker has been defaced, modified, or removed.
Damage, deterioration or malfunction resulting from:
• Accident, abuse, misuse, neglect, fire, water, lightning, or other acts of nature, commercial or industrial use, unauthorized product modification or failure to follow instructions included with the product.
• Third party products using Cooler Master Components will not be covered by warranty. See your vendor or the manufacturer for information about servicing.
• Repair or attempted repair by anyone not authorized by Cooler Master, Inc.
• Any shipment damages (claims must be made with the carrier).
• Unauthorized repairs to a Cooler Master product will void the warranty offered by the Program. Cooler Master reserves the right to refuse to service any product which has been altered, modified or repaired by non- Cooler Master Service personnel.
• Cooler Master does not warrant that this product will meet your requirements. It is your responsibility to determine the suitability of this product for your purpose.

• Removal or installation charges.
• You are responsible for the cost of shipping the product to Cooler Master. Cooler Master pays the cost of returning a product to you.
• Cooler Master reserves the right to replace the product with a service product at their sole discretion at any time.
• Product malfunction or damage resulting from liquids or moisture.
• All accessories that malfunction due to physical damage such as: USB cables, extension cables, adapter cables, adapters, power cords, screws, retention brackets, ear cups, and all other similar accessories.

Limitation of implied warranties:
THERE ARE NO WARRANTIES, EXPRESS OR IMPLIED, WHICH EXTEND BEYOND THE DESCRIPTION CONTAINED HEREIN INCLUDING THE IMPLIED WARRANTY OF MERCHANTABILITY AND FITNESS FOR A PARTICULAR PURPOSE.

Exclusion of damages
COOLER MASTER'S LIABILITY IS LIMITED TO THE COST OF REPAIR OR REPLACEMENT OF THE PRODUCT. COOLER MASTER SHALL NOT BE LIABLE FOR:
• DAMAGE TO OTHER PROPERTY CAUSED BY ANY DEFECT IN THE PRODUCT, DAMAGES BASED UPON INCONVENIENCE, LOSS OF USE OF THE PRODUCT, LOSS OF TIME, LOSS OF PROFITS, LOSS OF BUSINESS OPPORTUNITY, LOSS OF GOODWILL, INTERFERENCE WITH BUSINESS RELATIONSHIPS OR OTHER COMMERCIAL LOSS, EVEN IF ADVISED OF THEIR POSSIBILITY OF SUCH DAMAGES.
• ANY OTHER DAMAGES, WHETHER INCIDENTAL, CONSEQUENTIAL OR OTHERWISE
• ANY CLAIM AGAINST THE CUSTOMER BY ANY OTHER PARTY

Warranty Information:
If the goods is found with reasonable defect within the period of (refer to Table A.,) starting on the first day of purchase (with proof of invoice), this is what you must do, to claim the warranty from the above address.

Procedures:
1. Consumers should return to the shop where he/she has bought the goods, After confirming with the shop with a valid invoice, they may approach the distributor for RMA claim.
2. After confirmed by the distributor that the goods was damaged due to natural causes, replacement and repair will be done by distributor (including brand new or refurbished goods)
3. All faulty goods must return to the distributor, expenses for returning the faulty goods will be covered by the consumer, and distributor will cover the cost involved in the transporting of parts or repaired goods to the consumer.

South America
E -mail: Soporte_Latam@coolermaster.com.tw

Regarding all the expenses incurred in making the claim, and this is how you would claim:
1. Within the valid warranty date, starting from the first day of issuing invoice, Retail shops will assist in confirmation with distributor for the consumer for the following.
   A. If the damage was caused by the consumer, then the consumer should cover all expenses in fixing the product, if the product still can't be fixed, we would suggest consumer in buying a brand new product.
   B. Product defect caused under natural use, expenses will be covered by the distributor.
2. Faulty products with expired warranty dates, we would suggest consumer to purchase a brand new products, without undergoing for repairs.

Table A:
Cooler Master Products
Please check your user manual for the exact warranty period terms for products that are not shown below.
For more warranty information, please visit our official website: http://www.coolermaster.com/service/warranty.html

Chassis

Product Name	Warranty Term
All Chassis Series (Only Electronic Parts)	2 year
C+P (Chassis + PSU)	1 year

(EN) Limited warranty period: http://www.coolermaster.com/service/warranty.html
(AR) المحـــدود الضـــمان فـــترة : http://www.coolermaster.com/service/warranty.html
(BG) Период на ограничена гаранция: http://www.coolermaster.com/service/warranty.html
(CS) Období omezené záruky: http://www.coolermaster.com/service/warranty.html
(DA) Begrænset garanti: http://www.coolermaster.com/service/warranty.html
(DE) Beschränkter Garantiezeitraum: http://www.coolermaster.com/service/warranty.html
(EL) Περίοδος περιορισμένης εγγύησης: http://www.coolermaster.com/service/warranty.html
(ES) Periodo de garantía limitada: http://www.coolermaster.com/service/warranty.html

(FA) http://www.coolermaster.com/service/warranty.html : مدت زمان گارانتی
(FI) Rajoitettu takuujakso: http://www.coolermaster.com/service/warranty.html
(FR) Période de garantie limitée: http://www.coolermaster.com/service/warranty.html
(HU) Korlátozott jótállási időszak: http://www.coolermaster.com/service/warranty.html
(HR) Razdoblje ograničenog jamstva: http://www.coolermaster.com/service/warranty.html
(ID) Masa garansi terbatas: http://www.coolermaster.com/service/warranty.html
(IT) Periodo di garanzia limitata: http://www.coolermaster.com/service/warranty.html
(JA) 限定保証期間：http://www.coolermaster.com/service/warranty.html
(KO) 제한 보증 기간 : http://www.coolermaster.com/service/warranty.html
(KK) Кепілдік мерзімі: http://www.coolermaster.com/service/warranty.html
(NL) Beperkte garantieperiode: http://www.coolermaster.com/service/warranty.html
(NO) Garantiperiode, begrenset garanti: http://www.coolermaster.com/service/warranty.html
(PL) Okres ograniczonej gwarancji: http://www.coolermaster.com/service/warranty.html
(PT) Período de garantia limitada: http://www.coolermaster.com/service/warranty.html
(RU) Ограниченный гарантийный срок: http://www.coolermaster.com/service/warranty.html
(SR) Period ograničene garancije: http://www.coolermaster.com/service/warranty.html
(SV) Begränsad garantiperiod: http://www.coolermaster.com/service/warranty.html
(TR) Sınırlı garanti süresi: http://www.coolermaster.com/service/warranty.html
(UK) Обмежений гарантійний термін: http://www.coolermaster.com/service/warranty.html
(ZHT) 有限保固期間：http://www.coolermaster.com/service/warranty.html

tehnoteka

https://tehnoteka.rs

Ovaj dokument je originalno proizveden i objavljen od strane proizvođača, brenda Cooler Master, i preuzet je sa njihove zvanične stranice. S obzirom na ovu činjenicu, Tehnoteka ističe da ne preuzima odgovornost za tačnost, celovitost ili pouzdanost informacija, podataka, mišljenja, saveta ili izjava sadržanih u ovom dokumentu.

Napominjemo da Tehnoteka nema ovlašćenje da izvrši bilo kakve izmene ili dopune na ovom dokumentu, stoga nismo odgovorni za eventualne greške, propuste ili netačnosti koje se mogu naći unutar njega. Tehnoteka ne odgovara za štetu nanesenu korisnicima pri upotrebi netačnih podataka. Ukoliko imate dodatna pitanja o proizvodu, ljubazno vas molimo da kontaktirate direktno proizvođača kako biste dobili sve detaljne informacije.

Za najnovije informacije o ceni, dostupnim akcijama i tehničkim karakteristikama proizvoda koji se pominje u ovom dokumentu, molimo posetite našu stranicu klikom na sledeći link:

https://tehnoteka.rs/p/cooler-master-kuciste-masterbox-mb600l-v2-mb600l2-knnn-s00-akcija-cena/