tehnoteka

https://tehnoteka.rs

Uputstvo za upotrebu (EN)

ENERGY SISTEM slušalice Sport 2 TWS narandžaste

ENERGY SISTEM



Tehnoteka je online destinacija za upoređivanje cena i karakteristika bele tehnike, potrošačke elektronike i IT uređaja kod trgovinskih lanaca i internet prodavnica u Srbiji. Naša stranica vam omogućava da istražite najnovije informacije, detaljne karakteristike i konkurentne cene proizvoda.

Posetite nas i uživajte u ekskluzivnom iskustvu pametne kupovine klikom na link:

https://tehnoteka.rs/p/energy-sistem-slusalice-sport-2-tws-narandzaste-akcija-cena/

ENGLISH

Introduction 3
Care and maintenance 3
Safety 4
Features 4
General features 4
Technical specifications 4
Audio 4
Connectivity 4
Microphone 4
Battery 5
Other features 5
Product content 5
General overview 5
Main Functions 6
Switching on and off the device 6
Bluetooth pairing 7
Playback control 7
Call control 7
Using the Voice Assistant feature 7
Charging the battery 7
Warranty 8
Declaration of conformity 8



Introduction

- Thank you for trusting our company and buying the new *Earphones Sport 2 True Wireless*. We hope you enjoy the product.
- Forget about cables. Listen to your music through these sport True Wireless earphones while playing your favourite sport.
- Secure fit and comfort. Splashproof
- 20 h of battery life. Charge the charging case with a USB Type-C connector.

Care and maintenance

- Do not expose your *Earphones Sport 2 True Wireless* to impacts, dust, humidity or high temperatures.
- Use neither corrosive nor abrasive cleaning products.
- Do not disassemble the device. All repair works should be carried out exclusively by qualified staff of Energy Sistem Technology, S.A.
- Please make sure your *Earphones Sport 2 True Wireless* are off when you are not using them. Do not store them with an empty battery for long periods of time.
- You can use a clean wipe with a little hand sanitizer (Hydroalcoholic) to clean smoothly the external surfaces of

the Earphones and charging connectors. Do not use these products on the pads or the internal mesh of the earphones. Avoid getting the charging ports and connectors wet. **Note**: after practicing any exercise, it is recommended to dry the earphones well before placing them in their case.

Safety

- Before using the earphones, turn the volume down. Once you have done this, turn it up slowly until reaching the desired level.
- Avoid noisy environments that force you to turn the volume really high when using your earphones.
- Listening to loud music over a long period of time may cause your ears to get used to high volume levels, resulting in irreversible hearing loss.
- Adjust the volume of your earphones to hear important external sounds.

Features

General features

- Completely wireless in-ear headphones featuring True Wireless Stereo and Bluetooth 5.0 technology to enjoy a real wireless experience. Let nothing stand between you and your music.
- Sweat- and splashproof design. Sweat during your workout, clean your earphones and go on exercising. You don?t have to worry about anything else!
- Enjoy your music and calls and forget about running out of battery with the 20-hour battery life (4 hours every time you charge them and 16 additional hours with the charging case).
- Match the earphones with your style. Two sets of interchangeable silicone ear tips and wing tips in two colours to match your outfit.
- Secure-Fit+ system providing a discreet and perfect fit during your workouts.
- Easy Connect feature: the earbuds will sync automatically. Simple and easy.
- Built-in microphone and calls in stereo to speak comfortably, without worrying about the noise.

Technical specifications

Audio

- Frequency response: 20 Hz ~ 20 kHz
- Driver diameter: 8 mm
- Neodymium magnet
- Maximum power: 3 mW
- In-ear design
- Type: dynamic

Connectivity

- Bluetooth 5.0, class 2
- Frequency band: 2.4 GHz
- Maximum output power: < 20.00 dBm
- Compatible Bluetooth protocols: HFP / A2DP / AVRCP
- Up to 10 m range
- True Wireless function with auto-pairing
- Hands-free function
- Assistant that is compatible with Google/Siri

Microphone

- Type: in-line microphone
- Sensitivity: -42 dB ± 3 dB (@1 kHz)
- Frequency range: 100 Hz ~ 10 kHz

Battery

Earbuds:

- Capacity: 45 mAh / 3.7 V
- Type: lithium polymer
- Battery life at medium volume: 4 hours*
- Charging time: 1.5 hours
- Changing method: charging case

?*? This value is approximate. The battery life depends on the selected volume and the type of music.

Charging case:

- Capacity: 500 mAh / 3.7 V
- Type: lithium polymer
- Extra battery life: 16 hours
- Charging time: 2 hours
- Charging method: USB Type-C

Other features

- IPX4 certified

Product content

- Earphones Sport 2 True Wireless
- Charging case
- Two sets of interchangeable ear tips
- Two sets of interchangeable Secure Fit+ wing tips
- USB Type-C cable
- Quick guide

Important: We recommend trying out the provided ear tips in different sizes to choose the ones that fit your ears best. Using ear tips that don?t fit correctly may have an impact on the perceived sound quality.

General overview

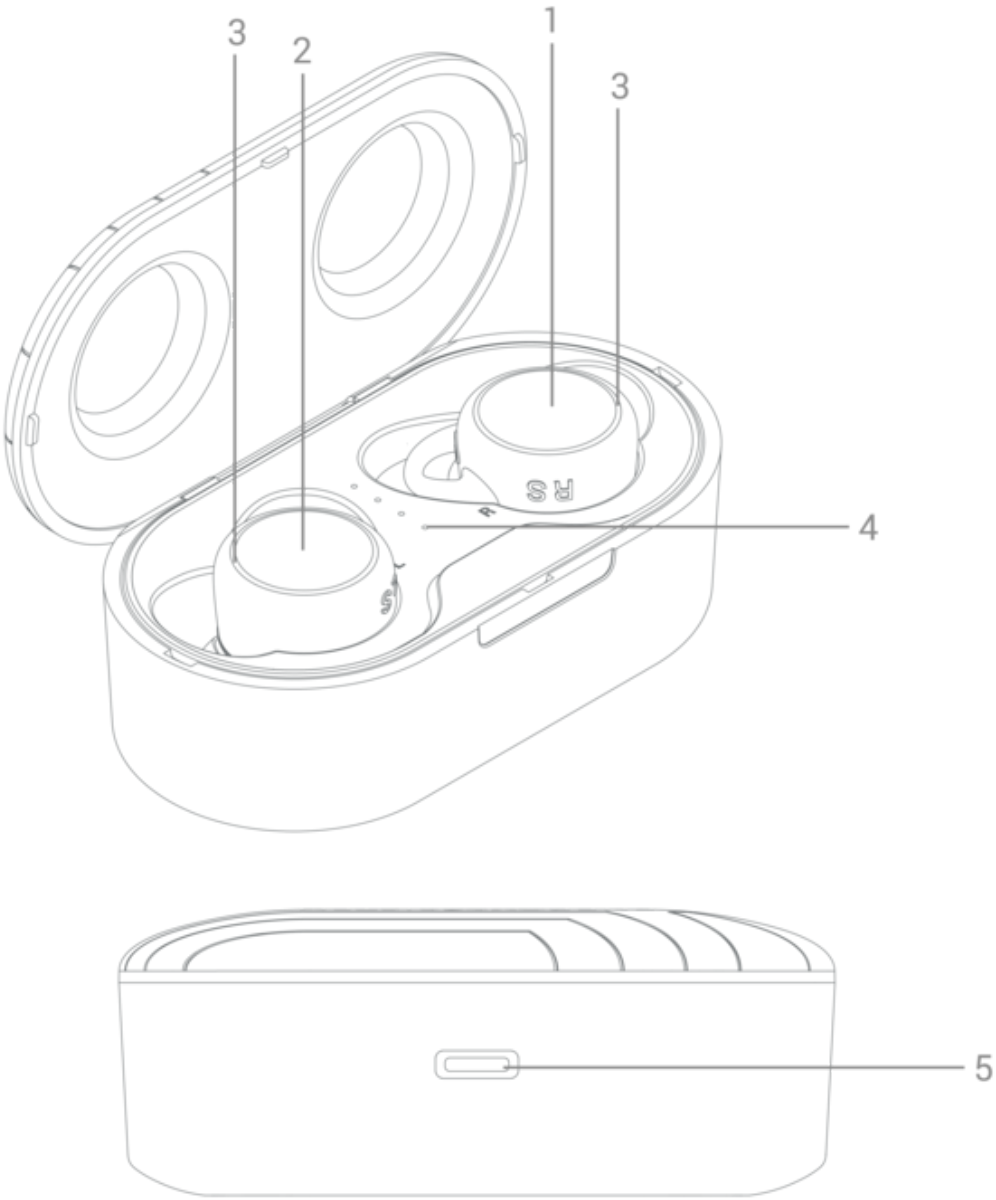

1. Right multifunction button
2. Left multifunction button
3. LED status indicator
4. Charging indicator (charging case)
5. USB Type-C charging port

Main Functions

Switching on and off the device

To switch on your *Earphones Sport 2 True Wireless*, simply take them out of the charging case or tap the *Right multifunction button (1)* and *Left multifunction button (2)* for 2 seconds. At this point, the *LED status indicator (3)* on the earbuds flashes red and blue and both units pair automatically.

To switch off your *Earphones Sport 2 True Wireless*, put them back in the charging case. You can also do this by tapping the *Right multifunction button (1)* and *Left multifunction button (2)* for 8 seconds.

Bluetooth pairing

Switch on your *Earphones Sport 2 True Wireless*. At this point, the *LED status indicator (3)* on the earbuds flashes red and blue and both units pair automatically. Select *Earphones Sport 2 True Wireless* from the list of Bluetooth devices on your smartphone or Bluetooth music player and press ?connect?. Both devices will be connected immediately and without codes. You will hear a confirmation sound when the devices are paired. At this point, the *LED status indicator (3)* flashes blue.

If you previously paired the earbuds with a device, there is no need to repeat the pairing process again. Just enable Bluetooth on your music player and switch on your *Earphones Sport 2 True Wireless*. They will sync with it automatically.

To optimise battery life, your earphones turn off automatically after 5 minutes, if not synchronized with any Bluetooth music player.

To disconnect your *Earphones Sport 2 True Wireless* from the Bluetooth music player and pair it with a new device, tap the *Right multifunction button (1)* or *Left multifunction button (2)* 5 times.

To pair again the earbuds via Bluetooth, press the *Right multifunction button (1)* or *Left multifunction button(2)* twain in a row and they will pair with each other.

Playback control

Play/Pause

Tap the *Right multifunction button (1)* or *Left multifunction button (2)* once to pause or resume playback.

Volume +/Volume -

Double tap the *Right multifunction button (1)* or *Left multifunction button (2)* to turn up or down the volume.

Skipping to the next or previous track

Tap and hold the *Right multifunction button (1)* or *Left multifunction button (2)* for 2 seconds to skip to the next or previous track during music playback.

Call control

Once the *Earphones Sport 2 True Wireless* and your smartphone are synchronized, you can control calls from the earphones.

Answering/Ending a call

To answer an incoming call, tap the *Right multifunction button (1)* or the *Left multifunction button (2)* once. Double tap the same button to hang up.

Using the Voice Assistant feature

You can interact with your smartphone voice assistant using your *Earphones Sport 2 True Wireless*. To do so, tap the *Right multifunction button (1)* or the *Left multifunction button (2)* 3 times in a row. You can give the voice command after hearing the confirmation sound.

Charging the battery

Earphones

When the battery level of your *Earphones Sport 2 True Wireless* is below 10%, you will hear a low battery warning sound. To charge the earphones? battery, put the earbuds back in the charging case. The earphones *LED status indicator (3)* lights up red and switches off once the charging process is complete.

Charging case

When the battery level of the charging case is below 10%, the first LED of the *Charging indicator (charging case) (4)* starts flashing. Plug the USB Type-C end of the provided cable into the *USB Type-C charging port (5)*, and the other end into a 5 V USB charging device. The LEDs of the *Charging indicator (charging case) (4)* light up as the battery charges. Once the charging process is complete, all LEDs will glow.

Note 1: When putting the earbuds in the charging case, make sure they are placed correctly and make contact, since this is necessary to charge the battery correctly. Check the Secure-Fit+ wing tips are positioned and oriented correctly.

Note 2: We recommend not leaving neither your *Earphones Sport 2 True Wireless* nor your charging case unused for long periods of time with an empty battery. We advise charging the battery at least once a month.

Caution: Do not charge your headphones with fast charging adapters or dedicated laptop charging adapters, Because their output voltage exceeds 5V and the device may become unusable.

Warranty

You can check the warranty terms here:
https://www.energysistem.com/terms-warranty

Declaration of conformity

Issuer's name: Energy Sistem Technology, S.A. - CIF: A53107488
Address: C/ Calpe, 1 - 03509 Finestrat, Alicante (Spain)
Tel: +34 966 830 324

We declare under our sole and exclusive responsibility that the product:

Description: wireless earphones
Brand: Energy Sistem
Model: Earphones Sport 2 True Wireless
Manufacturer: Energy Sistem Technology, S.A.
Manufacturing country: China

referred to in this declaration complies with the essential norms and standards:

EN 62368-1:2024+A11:2017
EN 62479:2010
ETSI EN 301 489-1 V2.2.3 (2019-11)
ETSI EN 301 489-17 V3.2.2 (2019-12)
ETSI EN 300 328 V2.2.2 (2019-07)

in conformity with the provisions of the Directive 2014/53/EU of the European Parliament and of the Council of 29th March 2014.

Finestrat, 1st October 2020



Miguel Ángel Aragüez García
Innovation and Technology Director

CE

tehnoteka

https://tehnoteka.rs

Ovaj dokument je originalno proizveden i objavljen od strane proizvođača, brenda Energy Sistem, i preuzet je sa njihove zvanične stranice. S obzirom na ovu činjenicu, Tehnoteka ističe da ne preuzima odgovornost za tačnost, celovitost ili pouzdanost informacija, podataka, mišljenja, saveta ili izjava sadržanih u ovom dokumentu.

Napominjemo da Tehnoteka nema ovlašćenje da izvrši bilo kakve izmene ili dopune na ovom dokumentu, stoga nismo odgovorni za eventualne greške, propuste ili netačnosti koje se mogu naći unutar njega. Tehnoteka ne odgovara za štetu nanesenu korisnicima pri upotrebi netačnih podataka. Ukoliko imate dodatna pitanja o proizvodu, ljubazno vas molimo da kontaktirate direktno proizvođača kako biste dobili sve detaljne informacije.

Za najnovije informacije o ceni, dostupnim akcijama i tehničkim karakteristikama proizvoda koji se pominje u ovom dokumentu, molimo posetite našu stranicu klikom na sledeći link:

https://tehnoteka.rs/p/energy-sistem-slusalice-sport-2-tws-narandzaste-akcija-cena/