tehnoteka

https://tehnoteka.rs

Uputstvo za upotrebu (EN)

LEVOIT prečišćivač vazduha VITAL 100-RXW



Tehnoteka je online destinacija za upoređivanje cena i karakteristika bele tehnike, potrošačke elektronike i IT uređaja kod trgovinskih lanaca i internet prodavnica u Srbiji. Naša stranica vam omogućava da istražite najnovije informacije, detaljne karakteristike i konkurentne cene proizvoda.

Posetite nas i uživajte u ekskluzivnom iskustvu pametne kupovine klikom na link:

https://tehnoteka.rs/p/levoit-preciscivac-vazduha-vital-100-rxw-akcija-cena/

USER MANUAL

True HEPA Air Purifier

Model: Vital 100 Series

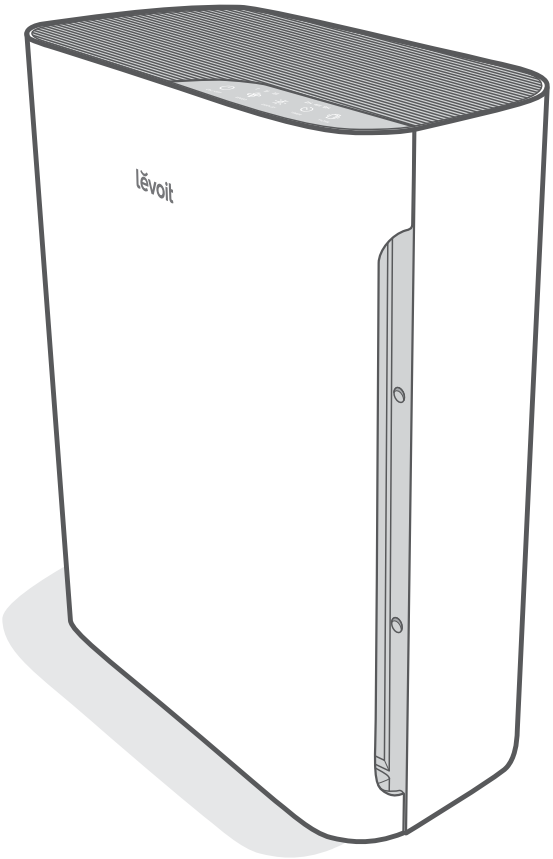

Questions or Concerns?

Please contact us Mon–Fri, 9:00 am–5:00 pm PST/PDT
at **support@levoit.com** or at **(888) 726-8520**.

Table of Contents

Package Contents	**2**
Specifications	**2**
Safety Information	**3**
Getting to Know Your Air Purifier	**4**
Controls	**5**
Getting Started	**5**
Using Your Air Purifier	**6**
About the Filter	**7**
Care & Maintenance	**9**
Troubleshooting	**12**
Warranty Information	**14**
Customer Support	**15**

Package Contents

1 × Air Purifier
1 × True HEPA 3-Stage Filter with Washable Pre-Filter (Pre-Installed)
1 × User Manual

Specifications

Voltage	AC 120V, 60Hz
Rated Power	55W
Ideal Room Size	300 ft^2 / 28 m^2 ***Note:*** *Effective for larger rooms, but purification will take longer.*
CADR	130 CFM / 221 m^3/h
Operating Conditions	**Temperature:** 14°–104°F / -10°–40°C
	Humidity: < 85% RH
Noise Level	23–50dB
Standby Power	< 0.5W
Dimensions	12.8 x 6.4 x 16.1 in / 32.4 x 16.2 x 41 cm
Weight	9.3 lb / 4.2 kg

READ AND SAVE THESE INSTRUCTIONS

SAFETY INFORMATION

To reduce the risk of fire, electric shock, or other injury, follow all instructions and safety guidelines.

General Safety

- **Only** use your air purifier as described in this manual.
- **Do not** use without removing the plastic wrap from the filter. The air purifier will not filter air and may overheat, causing a fire hazard.
- **Do not** use your air purifier outdoors.
- Keep your air purifier away from water, and wet or damp areas. **Never** place in water or liquid.
- **Do not** use in excessively humid areas.
- Keep your air purifier away from heat sources.
- **Do not** use where combustible gases, vapors, metallic dust, aerosol (spray) products, or fumes from industrial oil are present.
- Keep 5 ft / 1.5 m away from where oxygen is being administered.
- Supervise children when they are near the air purifier.
- **Do not** place anything into any opening on the air purifier.
- **Do not** sit or place heavy objects on the air purifier.
- Keep the inside of the air purifier dry. To prevent moisture buildup, avoid placing in rooms with major temperature changes or underneath air conditioners.
- **Always** unplug your air purifier before servicing (such as changing the filter).
- **Do not** use your air purifier if it is damaged or not working correctly, or if the cord or plug is damaged. **Do not** try to repair it yourself. Contact **Customer Support** (see page 15).
- **WARNING:** To reduce the risk of fire or electric shock, **do not** use this air purifier with any solid-state speed controls (such as a dimmer switch).
- Not for commercial use. Household use **only**.

Plug & Cord

- Keep the air purifier near the outlet it is plugged into.
- **Never** place the cord near any heat source.
- **Do not** cover the cord with a rug, carpet, or other covering. **Do not** place the cord under furniture or appliances.
- Keep the cord out of areas where people walk often. Place the cord where it will not be tripped over.
- This appliance has a polarized plug (one blade is wider than the other). To reduce the risk of electric shock, this plug is intended to fit in a polarized outlet **only** one way. If the plug does not fit fully in the outlet, reverse the plug. If it still does not fit, contact a qualified electrician. **Do not** attempt to defeat this safety feature.
- This air purifier uses standard US 120V, 60Hz outlets. If using in a different area, check for compatibility.

GETTING TO KNOW YOUR AIR PURIFIER

A. Air Inlet
B. Filter Cover
C. True HEPA 3-Stage Filter
D. On/Off Button
E. Fan Speed Indicators
F. Fan Speed Button
G. Display Off Button
H. Timer Indicators
I. Timer Button
J. Check Filter Indicator
K. Air Outlet
L. Housing
M. Power Cord
N. Anti-Skid Pads

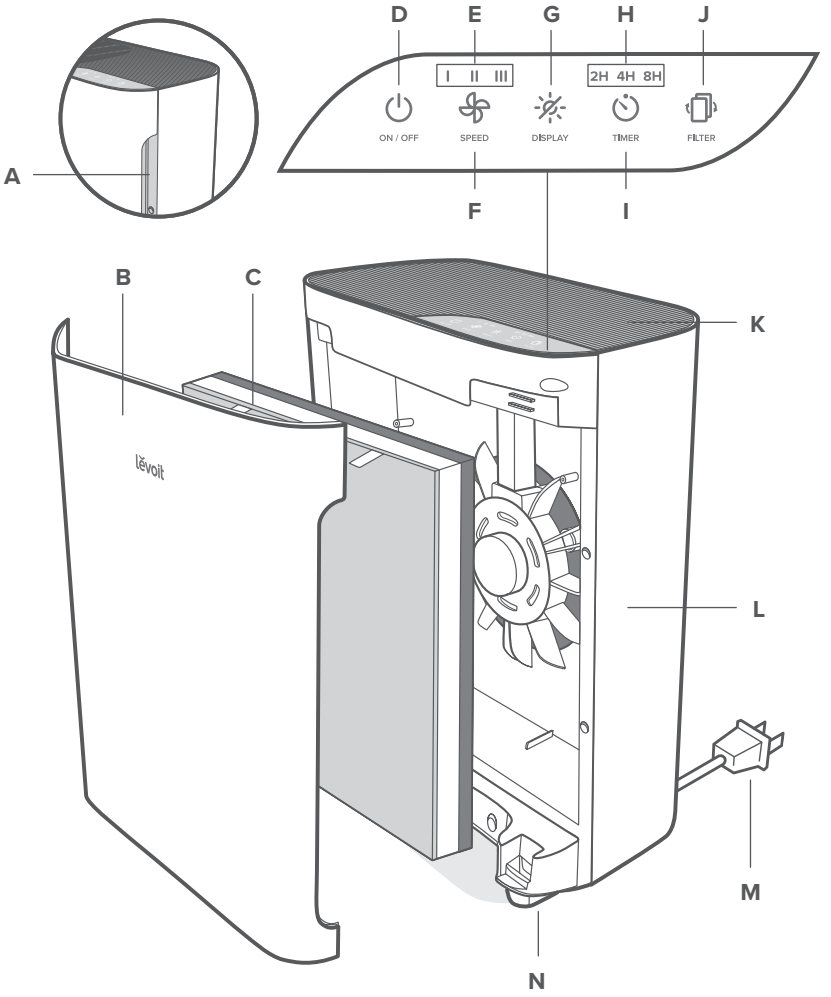

CONTROLS

On/Off Button
- Turns the air purifier on/off.

Fan Speed Button
- Cycles through fan speeds: I (low), II (medium), and III (high).

Display Off Button
- Turns the display off.
- Tap any button (except ⏻) to turn the display back on.

Timer Button
- Cycles through timer options (see page 7).

Check Filter Indicator
- Lights up when the air filter should be checked (see **Check Filter Indicator**, page 9).

GETTING STARTED

1. Open the filter cover of the air purifier and remove the True HEPA filter from its plastic packaging. *[Figure 1.1]*
2. Place the filter back into the air purifier with the pull tabs facing out. *[Figure 1.2]*

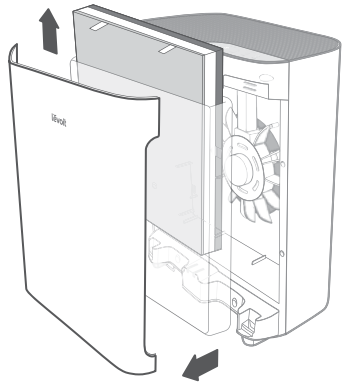

Figure 1.1

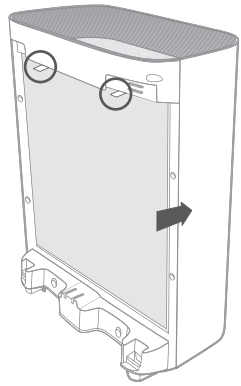

Figure 1.2

3. Replace the back cover by lining up the cover's feet with the matching slots on the bottom of the housing. *[Figure 1.3]*
4. Push the cover closed.
5. Place the air purifier on a hard, flat surface. Leave 15 inches / 38 cm of clearance to allow air to pass through the air inlets on the sides. *[Figure 1.4]*

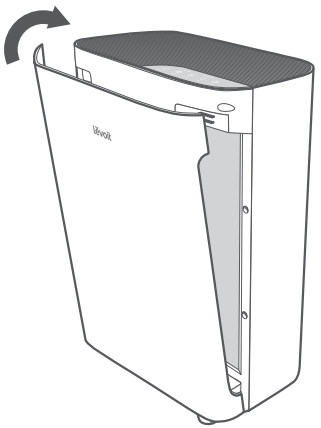

Figure 1.3

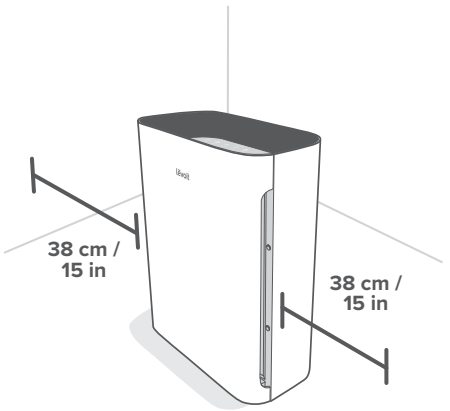

Figure 1.4

USING YOUR AIR PURIFIER

General Operation

1. Plug in and tap ⏻ to turn the air purifier on/off. The fan will start on level I.
2. Optionally, tap ✣ to cycle fan speeds between I, II, and III.

Note:

- *The indicators are not buttons and cannot be used to change the fan speed.*
- *The fan speed indicators will light up when active.*
- *Fan speed III is the loudest, but cleans air the quickest.*
- *For best results, or to address a specific air quality issue such as smoke, run the air purifier at high speed (level III) for 15–20 minutes before using a lower speed.*
- *To effectively clean air, keep windows and doors closed while the air purifier is on.*

Memory Function

When the air purifier is plugged in, it will remember its previous fan speed setting.

Note: *The air purifier will not remember timers.*

Timer

You can set a timer for 2, 4, or 8 hours.

1. Tap ⏲ repeatedly to select a time. The timer will start automatically.

   Note:

   - *The indicators are not buttons and cannot be used to select a time.*
   - *The timer indicators will light up blue when active.*

2. Once the timer has finished, the air purifier will turn off.
3. To cancel a timer, tap ⏲ until all timer indicators are off.

   Note:

   - *You can change the fan speed at any time while the timer is on.*
   - *The timer will restart if the time is changed.*

ABOUT THE FILTER

The air purifier uses a 3-stage filtration system to purify air.

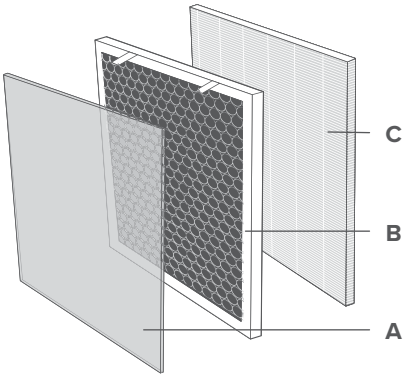

A. Washable Pre-Filter

- Captures large particles such as dust, lint, fibers, hair, and pet fur.
- Maximizes the filter's life by protecting it.

B. High-Efficiency Activated Carbon Filter

- Physically adsorbs smoke, odors, and fumes.
- Filters compounds such as formaldehyde, benzene, ammonia, hydrogen sulfide, and volatile organic compounds (VOCs).

C. H13 True HEPA Filter

- Traps at least 99.97% of airborne particles 0.3 micrometers in diameter.
- Filters small particles such as fine dust, smoke particles, and allergens such as pollen and pet dander.

Note: *Levoit air purifiers filter airborne particles 0.3 microns in size. Arovast Corporation makes no claims that this air purifier helps reduce the COVID-19 virus.*

Clean Air Delivery Rate

This air purifier has a Clean Air Delivery Rate of 130 cubic feet per minute (CFM), or 221 m^3/h.

Clean Air Delivery Rate (CADR) measures the efficiency of an air purifier by indicating the volume of clean air that an air purifier produces per minute. This is based on removal of dust, pollen, and smoke, which are the 3 most common indoor air pollutants. The higher the CADR, the more particles the air purifier will remove and the larger the area it can clean. The rating is measured at the air purifier's highest speed.

Air Change Per Hour

The air change rate is how many times all of the air in a room can be purified (or "changed") by the air purifier in 1 hour. Air changes per hour are calculated on the recommended room size assuming 8 ft / 2.4 m ceilings. For smaller rooms, the air change per hour will increase. This air purifier has an air change per hour of 3.3, which means it can change air 3.3 times at the max speed in a single, closed room up to 300 ft^2 / 28 m^2 in size. The air purifier is effective for larger rooms, but air purification will take longer, with fewer air changes per hour.

> ***Note:*** *To effectively clean air, keep windows and doors closed while the air purifier is on.*

Humidity

Note: Water or moisture will allow mold to grow. To solve a mold problem, get rid of the source of the moisture and clean up the mold.

> ***Note:*** *Water or moisture will allow mold to grow. To solve a mold problem, get rid of the source of the moisture and clean up the mold.*

Essential Oils

Do not add essential oils to the air purifier or air filter. The filter will become damaged by the oil and will eventually release an unpleasant smell. **Do not** use oil diffusers near the air purifier.

CARE & MAINTENANCE

Cleaning the Air Purifier

- Unplug before cleaning.
- Wipe the outside of the air purifier with a soft, dry cloth. If necessary, wipe the housing with a damp cloth, then immediately dry.
- Vacuum the inside of the air purifier.
- **Do not** clean with abrasive chemicals or flammable cleaning agents.

Check Filter Indicator

will light up as a reminder to check the filter. Depending on how often you use the air purifier, the indicator should turn on within 6–8 months. You may not need to replace your filter yet, but you should check it when turns on.

When Should I Replace the Filter?

The filter should be replaced every 6–8 months. You may need to replace your filter earlier or later depending on how often you use your air purifier. Using your air purifier in an environment with relatively high pollution may mean you will need to replace the filter more often, even if is off.

You may need to replace your filter if you notice:

- Increased noise when the air purifier is on
- Decreased airflow
- Unusual odors
- A visibly clogged filter

Note:

- *To maintain the performance of your air purifier, **only** use official Levoit filters. To buy replacement filters, visit Levoit's online store. Go to **levoit.com** for more information.*
- *Remember to reset after changing the filter.*

Resetting the Check Filter Indicator

Reset the Check Filter Indicator when:

A. lights up.

1. Replace the air filter (see page 11).
2. Turn on the air purifier.
3. Press and hold for 3 seconds.
4. will turn off when successfully reset.

B. The filter was changed before lit up.

1. Press and hold for 3 seconds. This will turn on .
2. Press and hold again for 3 seconds.
3. will turn off when successfully reset.

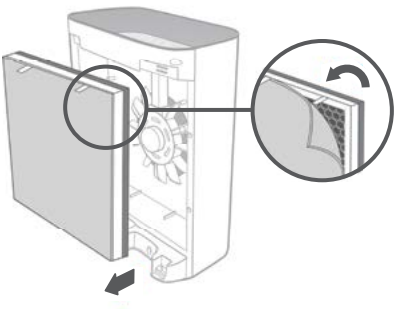

Figure 2.1

Cleaning the Filter

The Pre-Filter should be cleaned once a month to increase efficiency and extend the life of your filter.

1. Remove the filter from the housing and clean the Pre-Filter with a soft brush or vacuum hose to remove hair, dust, and large particles.
2. Carefully peel the Pre-Filter away from the True HEPA and Activated Carbon Filters. *[Figure 2.1]*
3. Gently wash the Pre-Filter under running water. Dry completely before placing it back on the velcro tape.
4. Replace filter in housing.

***Note: Do not** clean the True HEPA and Activated Carbon Filters.*

Filter	When to Clean	When to Replace
Pre-Filter	Vacuum every 2–4 weeks	6–8 months
	Wash every 1–2 months	
True HEPA & Activated Carbon Filter	Do not clean	

Replacing the Filter

1. Unplug the air purifier and remove the filter cover.
2. Remove the old air filter and properly dispose of it.
3. Clean out any remaining dust or hair inside the air purifier using a vacuum hose. **Do not** use water or liquids to clean the air purifier. *[Figure 2.2]*
4. Unwrap the new filter and place inside the air purifier with the pull tabs facing out.
5. Replace the filter cover. The air purifier will not power on unless the filter cover is replaced correctly.
6. Reset the Check Filter Indicator (see page 10).

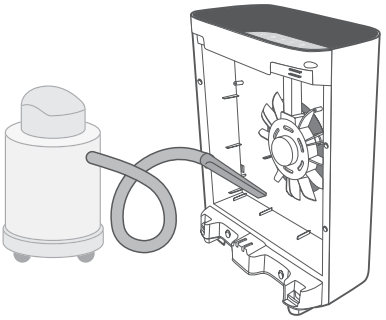

Figure 2.2

Storage

If not using the air purifier for an extended period of time, wrap the filter in plastic packaging and store in a dry place to avoid moisture damage.

TROUBLESHOOTING

Problem	Possible Solution
Air purifier will not turn on or respond to button controls.	Plug in the air purifier.
	Check to see if the power cord is damaged. If so, stop using the air purifier and contact **Customer Support** (see page 15).
	Plug the air purifier into a different outlet.
	Air purifier is malfunctioning. Contact **Customer Support** (see page 15).
Airflow is significantly reduced.	Make sure the filter is removed from its packaging and properly in place (see page 5).
	Tap to increase the fan speed.
	Leave at least 15 inches / 38 cm of clearance to allow air to pass through the air inlets on the sides.
	The Pre-Filter may be clogged by large particles, such as hair or lint, blocking air flow. Clean the Pre-Filter (see page 10).
	Replace the filter (see page 11).
Air purifier makes an unusual noise while the fan is on.	Make sure the filter is properly in place with plastic packaging removed (see page 5).
	Make sure the air purifier is operating on a hard, flat, even surface.
	Replace the filter (see page 11).
	Air purifier may be damaged, or a foreign object may be inside. Stop using the air purifier and contact **Customer Support** (see page 15). **Do not** try to repair the air purifier.
Strange smell coming from the air purifier.	Clean the filter or replace if necessary.
	Contact **Customer Support** (see page 15).
	Make sure not to use your air purifier in an area with high humidity or while diffusing essential oils.

Problem	Possible Solution
Poor air purification quality.	Tap to increase the fan speed.
	Make sure no objects are blocking the sides or top of the air purifier (the inlet or outlet).
	Make sure the filter is removed from its packaging and properly in place (see page 5).
	Close doors and windows while using the air purifier.
	If the room is larger than 300 ft^2 / 28 m^2, air purification will take longer. The air purifier may not be as effective in significantly larger rooms.
	Replace the filter (see page 11).
is still on after replacing the filter.	Reset the Check Filter Indicator (see page 10).
has not turned on within 8 months.	is a reminder for you to check the filter and will light up based on how much the air purifier has been used (see page 9). If you don't use your air purifier often, will take longer to turn on.
turned on before 6 months.	is a reminder for you to check the filter and will light up based on how much the air purifier has been used (see page 9). If you run your air purifier frequently, will turn on sooner.

If your problem is not listed, please contact **Customer Support** (see page 15).

WARRANTY INFORMATION

Product	True HEPA Air Purifier
Model	Vital 100 Series
Order ID	
Date of Purchase	

Terms & Policy

Arovast Corporation ("Arovast") warrants this product to the original purchaser to be free from defects in material and workmanship, under normal use and conditions, for a period of 1 year from the date of original purchase.

Arovast agrees, at our option during the warranty period, to repair any defect in material or workmanship or furnish an equal product in exchange without charge, subject to verification of the defect or malfunction and proof of the date of purchase.

There is no other express warranty. This warranty does not apply:

- If the product has been modified from its original condition;
- If the product has not been used in accordance with directions and instructions in the user manual;
- To damages or defects caused by accident, abuse, misuse or improper or inadequate maintenance;
- To damages or defects caused by service or repair of the product performed by an unauthorized service provider or by anyone other than Arovast;
- To damages or defects occurring during commercial use, rental use, or any use for which the product is not intended;
- To damages or defects exceeding the cost of the product.

Arovast will not be liable for indirect, incidental, or consequential damages in connection with the use of the product covered by this warranty.

This warranty extends only to the original consumer purchaser of the product and is not transferable to any subsequent owner of the product regardless of whether the product is transferred during the specified term of the warranty.

This warranty does not extend to products purchased from unauthorized sellers. Arovast's warranty extends only to products purchased from authorized sellers that are subject to Arovast's quality controls and have agreed to follow its quality controls.

All implied warranties are limited to the period of this limited warranty.

This warranty gives you specific legal rights and you may also have other rights which vary from state to state. Some states do not allow the exclusion or limitation of incidental or consequential damages, so the above limitation or exclusion may not apply to you.

If you discover that your product is defective within the specified warranty period, please contact Customer Support via **support@levoit.com. DO NOT** dispose of your product before contacting us. Once our Customer Support Team has approved your request, please return the product with a copy of the invoice and order ID.

Extend Your Warranty by 1 Year

Register your product within 14 days of purchase at **www.levoit.com/warranty** to extend your 1-year warranty by an additional year.

This warranty is made by:

Arovast Corporation
1202 N. Miller St. Suite A
Anaheim, CA 93806

CUSTOMER SUPPORT

If you have any questions or concerns about your new product, please contact our helpful Customer Support Team.

Arovast Corporation
1202 N. Miller St., Suite A
Anaheim, CA 92806

Email: support@levoit.com
Toll-Free: (888) 726-8520

Support Hours

Mon–Fri, 9:00 am–5:00 pm PST/PDT

*Please have your order invoice and order ID ready before contacting Customer Support.

levoit.com

Connect with us @LevoitLifestyle

tehnoteka

https://tehnoteka.rs

Ovaj dokument je originalno proizveden i objavljen od strane proizvođača, brenda Levoit, i preuzet je sa njihove zvanične stranice. S obzirom na ovu činjenicu, Tehnoteka ističe da ne preuzima odgovornost za tačnost, celovitost ili pouzdanost informacija, podataka, mišljenja, saveta ili izjava sadržanih u ovom dokumentu.

Napominjemo da Tehnoteka nema ovlašćenje da izvrši bilo kakve izmene ili dopune na ovom dokumentu, stoga nismo odgovorni za eventualne greške, propuste ili netačnosti koje se mogu naći unutar njega. Tehnoteka ne odgovara za štetu nanesenu korisnicima pri upotrebi netačnih podataka. Ukoliko imate dodatna pitanja o proizvodu, ljubazno vas molimo da kontaktirate direktno proizvođača kako biste dobili sve detaljne informacije.

Za najnovije informacije o ceni, dostupnim akcijama i tehničkim karakteristikama proizvoda koji se pominje u ovom dokumentu, molimo posetite našu stranicu klikom na sledeći link:

https://tehnoteka.rs/p/levoit-preciscivac-vazduha-vital-100-rxw-akcija-cena/